PART D

STANDARDS FOR PROTECTION AGAINST RADIATION

General Provisions

Sec. D.1001 - Purpose.

a. Part D establishes standards for protection against ionizing radiation resulting from activities conducted pursuant to licenses or registrations issued by the Agency. These regulations are issued pursuant to the [cite Radiation Control Act, as amended].

b. The requirements of Part D are designed to control the receipt, possession, use, transfer, and disposal of sources of radiation by any licensee or registrant so the total dose to an individual, including doses resulting from all sources of radiation other than background radiation, does not exceed the standards for protection against radiation prescribed in Part D. However, nothing in Part D shall be construed as limiting actions that may be necessary to protect health and safety.

Sec. D.1002 - Scope. Except as specifically provided in other Parts of these regulations, Part D applies to persons licensed or registered by the Agency to receive, possess, use, transfer, or dispose of sources of radiation. The limits in Part D do not apply to doses due to background radiation, to exposure of patients to radiation for the purpose of medical diagnosis or therapy, to exposure from individuals administered radioactive material and released in accordance with [cite appropriate Part G reference] or to voluntary participation in medical research programs.

Sec. D.1003 - Definitions. As used in Part D:

"Annual limit on intake" (ALI) means the derived limit for the amount of radioactive material taken into the body of an adult worker by inhalation or ingestion in a year. ALI is the smaller value of intake of a given radionuclide in a year by the reference man that would result in a committed effective dose equivalent of 0.05 Sievert (5 rem) or a committed dose equivalent of 0.5 Sievert (50 rem) to any individual organ or tissue. ALI values for intake by ingestion and by inhalation of selected radionuclides are given in Table I, Columns 1 and 2, of Appendix B.

"Class" means a classification scheme for inhaled material according to its rate of clearance from the pulmonary region of the lung. Materials are classified as D, W, or Y, which applies to a range of clearance half-times: for Class D, Days, of less than 10 days, for Class W, Weeks, from 10 to 100 days, and for Class Y, Years, of greater than 100 days. For purposes of these regulations, "lung class" and "inhalation class" are equivalent terms.

"Constraint (Dose constraint)" means a value above which specified license actions are required.

"Declared pregnant woman" means a woman who has voluntarily informed the licensee or registrant, in writing, of her pregnancy and the estimated date of conception. The declaration remains in effect until the declared pregnant woman withdraws the declaration in writing or is no longer pregnant.

"Derived air concentration" (DAC) means the concentration of a given radionuclide in air which, if breathed by the reference man for a working year of 2,000 hours under conditions of light work, results in an intake of one ALI. For purposes of these regulations, the condition of light work is an inhalation rate of 1.2 cubic meters of air per hour for 2,000 hours in a year. DAC values are given in Table I, Column 3, of Appendix B.

"Derived air concentration-hour" (DAC-hour) means the product of the concentration of radioactive material in air, expressed as a fraction or multiple of the derived air concentration for each radionuclide, and the time of exposure to that radionuclide, in hours. A licensee or registrant may take 2,000 DAC-hours to represent one ALI, equivalent to a committed effective dose equivalent of 0.05 Sievert (5 rem).

"Dosimetry processor" means an individual or an organization that processes and evaluates individual monitoring equipment in order to determine the radiation dose delivered to the monitoring equipment.

"Inhalation class" [see "Class"].

"Lung class" [see "Class"].

"Nonstochastic effect" means a health effect, the severity of which varies with the dose and for which a threshold is believed to exist. Radiation-induced cataract formation is an example of a nonstochastic effect. For purposes of these regulations, "deterministic effect" is an equivalent term.

"Planned special exposure" means an infrequent exposure to radiation, separate from and in addition to the annual dose limits.

"Quarter" means a period of time equal to one-fourth of the year observed by the licensee, approximately 13 consecutive weeks, providing that the beginning of the first quarter in a year coincides with the starting date of the year and that no day is omitted or duplicated in consecutive quarters.

"Reference man" means a hypothetical aggregation of human physical and physiological characteristics determined by international consensus. These characteristics may be used by researchers and public health employees to standardize results of experiments and to relate biological insult to a common base. A description of the reference man is contained in the International Commission on Radiological Protection report, ICRP Publication 23, "Report of the Task Group on Reference Man."

"Respiratory protective device" means an apparatus, such as a respirator, used to reduce an individual's intake of airborne radioactive materials.

"Sanitary sewerage" means a system of public sewers for carrying off waste water and refuse, but excluding sewage treatment facilities, septic tanks, and leach fields owned or operated by the licensee or registrant.

"Stochastic effect" means a health effect that occurs randomly and for which the probability of the effect occurring, rather than its severity, is assumed to be a linear function of dose without threshold. Hereditary effects and cancer incidence are examples of stochastic effects. For purposes of these regulations, "probabilistic effect" is an equivalent term.

"Very high radiation area" means an area, accessible to individuals, in which radiation levels from radiation sources external to the body could result in an individual receiving an absorbed dose in excess of 5 Gray (500 rad) in 1 hour at 1 meter from a source of radiation or 1 meter from any surface that the radiation penetrates.

"Weighting factor" w_T for an organ or tissue (T) means the proportion of the risk of stochastic effects resulting from irradiation of that organ or tissue to the total risk of stochastic effects when the whole body is irradiated uniformly. For calculating the effective dose equivalent, the values of w_T are:

Organ Dose Weighting Factors

Organ or Tissue	w_T
Gonads	0.25
Breast	0.15
Red bone marrow	0.12
Lung	0.12
Thyroid	0.03
Bone surfaces	0.03
Remainder	0.30[a/]
Whole Body	1.00[b/]

Sec. D.1004 - Implementation.

a. Any existing license or registration condition that is more restrictive than Part D remains in force until there is an amendment or renewal of the license or registration.

b. If a license or registration condition exempts a licensee or registrant from a provision of Part D in effect on or before [effective date of these regulations], it also exempts the licensee or registrant from the corresponding provision of Part D.

c. If a license or registration condition cites provisions of Part D in effect prior to [effective date of these regulations], which do not correspond to any provisions of Part D, the license or registration condition remains in force until there is an amendment or renewal of the license

[a/] *0.30 results from 0.06 for each of 5 "remainder" organs, excluding the skin and the lens of the eye, that receive the highest doses.*

[b/] *For the purpose of weighting the external whole body dose, for adding it to the internal dose, a single weighting factor, w_T = 1.0, has been specified. The use of other weighting factors for external exposure will be approved on a case-by-case basis until such time as specific guidance is issued.*

or registration that modifies or removes this condition.

Radiation Protection Programs

Sec. D.1101 - Radiation Protection Programs.

a. Each licensee or registrant shall develop, document, and implement a radiation protection program sufficient to ensure compliance with the provisions of D.2102 for recordkeeping requirements relating to these programs.

b. The licensee or registrant shall use, to the extent practical, procedures and engineering controls based upon sound radiation protection principles to achieve occupational doses and doses to members of the public that are as low as is reasonably achievable (ALARA).

c. The licensee or registrant shall, at intervals not to exceed 12 months, review the radiation protection program content and implementation.

d. To implement the ALARA requirements of D.1101b. and notwithstanding the requirements in D.1301, a constraint on air emissions of radioactive material to the environment, excluding Radon-222 and its daughters, shall be established by licensees other than those subject to 10 CFR Part 50.34a of the USNRC regulations, such that the individual member of the public likely to receive the highest dose will not be expected to receive a total effective dose equivalent in excess of 0.1 millisievert (10 mrem) per year from these emissions. If a licensee subject to this requirement exceeds this dose constraint, the licensee shall report the exceedance as provided in D.2203 and promptly take appropriate corrective action to ensure against recurrence.

Occupational Dose Limits

Sec. D.1201 - Occupational Dose Limits for Adults.

a. The licensee or registrant shall control the occupational dose to individual adults, except for planned special exposures pursuant to D.1206, to the following dose limits:

   i. An annual limit, which is the more limiting of:

      (1) The total effective dose equivalent being equal to 0.05 Sievert (5 rem); or

      (2) The sum of the deep dose equivalent and the committed dose equivalent to any individual organ or tissue other than the lens of the eye being equal to 0.5 Sievert (50 rem).

   ii. The annual limits to the lens of the eye, to the skin, and to the extremities which are:

      (1) A lens dose equivalent of 0.15 Sievert (15 rem); and

(2) A shallow dose equivalent of 0.5 Sievert (50 rem) to the skin or to any extremity.

b. Doses received in excess of the annual limits, including doses received during accidents, emergencies, and planned special exposures, shall be subtracted from the limits for planned special exposures that the individual may receive during the current year and during the individual's lifetime. See D.1206e.i. and ii.

c. The assigned deep dose equivalent and shallow dose equivalent shall be for the portion of the body receiving the highest exposure:

i. The deep dose equivalent, lens dose equivalent and shallow dose equivalent may be assessed from surveys or other radiation measurements for the purpose of demonstrating compliance with the occupational dose limits, if the individual monitoring device was not in the region of highest potential exposure, or the results of individual monitoring are unavailable; or

ii. When a protective apron is worn while working with medical fluoroscopic equipment and monitoring is conducted as specified in D.1502a.v., the effective dose equivalent for external radiation shall be determined as follows:

(1) When only one individual monitoring device is used and it is located at the neck (collar) outside the protective apron, the reported deep dose equivalent shall be the effective dose equivalent for external radiation; or

(2) When only one individual monitoring device is used and it is located at the neck (collar) outside the protective apron, and the reported dose exceeds 25 percent of the limit specified in D.1201a., the reported deep dose equivalent value multiplied by 0.3 shall be the effective dose equivalent for external radiation; or

(3) When individual monitoring devices are worn, both under the protective apron at the waist and outside the protective apron at the neck, the effective dose equivalent for external radiation shall be assigned the value of the sum of the deep dose equivalent reported for the individual monitoring device located at the waist under the protective apron multiplied by 1.5 and the deep dose equivalent reported for the individual monitoring device located at the neck outside the protective apron multiplied by 0.04.

d. Derived air concentration (DAC) and annual limit on intake (ALI) values are specified in Table I of Appendix B and may be used to determine the individual's dose and to demonstrate compliance with the occupational dose limits. See D.2106.

e. In addition to the annual dose limits, the licensee or registrant shall limit the soluble uranium intake by an individual to 10 milligrams in a week in consideration of chemical toxicity. See footnote [c/] of Appendix B.

f. The licensee or registrant shall reduce the dose that an individual may be allowed to receive in the current year by the amount of occupational dose received while employed by any other person during the current year. See D.2104.

Sec. D.1202 - Compliance with Requirements for Summation of External and Internal Doses.

a. If the licensee or registrant is required to monitor pursuant to both D.1502a. and b., the licensee or registrant shall demonstrate compliance with the dose limits by summing external and internal doses. If the licensee or registrant is required to monitor only pursuant to D.1502a. or only pursuant to D.1502b., then summation is not required to demonstrate compliance with the dose limits. The licensee or registrant may demonstrate compliance with the requirements for summation of external and internal doses pursuant to D.1202b., c. and d. The dose equivalents for the lens of the eye, the skin, and the extremities are not included in the summation, but are subject to separate limits.

b. Intake by Inhalation. If the only intake of radionuclides is by inhalation, the total effective dose equivalent limit is not exceeded if the sum of the deep dose equivalent divided by the total effective dose equivalent limit, and one of the following, does not exceed unity:

i. The sum of the fractions of the inhalation ALI for each radionuclide; or

ii. The total number of derived air concentration-hours (DAC-hours) for all radionuclides divided by 2,000; or

iii. The sum of the calculated committed effective dose equivalents to all significantly irradiated organs or tissues (T) calculated from bioassay data using appropriate biological models and expressed as a fraction of the annual limit. For purposes of this requirement, an organ or tissue is deemed to be significantly irradiated if, for that organ or tissue, the product of the weighting factors, w_T, and the committed dose equivalent, $H_{T,50}$, per unit intake is greater than 10 percent of the maximum weighted value of $H_{T,50}$, that is, $w_T H_{T,50}$, per unit intake for any organ or tissue.

c. Intake by Oral Ingestion. If the occupationally exposed individual receives an intake of radionuclides by oral ingestion greater than 10 percent of the applicable oral ALI, the licensee or registrant shall account for this intake and include it in demonstrating compliance with the limits.

d. Intake through Wounds or Absorption through Skin. The licensee or registrant shall evaluate and, to the extent practical, account for intakes through wounds or skin absorption. The intake through intact skin has been included in the calculation of DAC for hydrogen-3 and does not need to be evaluated.

Sec. D.1203 - Determination of External Dose from Airborne Radioactive Material.

a. Licensees or registrants shall, when determining the dose from airborne radioactive material, include the contribution to the deep dose equivalent, lense dose equivalent, and shallow dose

equivalent from external exposure to the radioactive cloud. See Appendix B, footnotes[a/] and [b/].

b. Airborne radioactivity measurements and DAC values shall not be used as the primary means to assess the deep dose equivalent when the airborne radioactive material includes radionuclides other than noble gases or if the cloud of airborne radioactive material is not relatively uniform. The determination of the deep dose equivalent to an individual shall be based upon measurements using instruments or individual monitoring devices.

Sec. D.1204 - Determination of Internal Exposure.

a. For purposes of assessing dose used to determine compliance with occupational dose equivalent limits, the licensee or registrant shall, when required pursuant to D.1502, take suitable and timely measurements of:

   i. Concentrations of radioactive materials in air in work areas; or

   ii. Quantities of radionuclides in the body; or

   iii. Quantities of radionuclides excreted from the body; or

   iv. Combinations of these measurements.

b. Unless respiratory protective equipment is used, as provided in D.1703, or the assessment of intake is based on bioassays, the licensee or registrant shall assume that an individual inhales radioactive material at the airborne concentration in which the individual is present.

c. When specific information on the physical and biochemical properties of the radionuclides taken into the body or the behavior of the material in an individual is known, the licensee or registrant may:

   i. Use that information to calculate the committed effective dose equivalent, and, if used, the licensee or registrant shall document that information in the individual's record; and

   ii. Upon prior approval of the Agency, adjust the DAC or ALI values to reflect the actual physical and chemical characteristics of airborne radioactive material, for example, aerosol size distribution or density; and

   iii. Separately assess the contribution of fractional intakes of Class D, W, or Y compounds of a given radionuclide to the committed effective dose equivalent. See Appendix B.

d. If the licensee or registrant chooses to assess intakes of Class Y material using the measurements given in D.1204a.ii. or iii., the licensee or registrant may delay the recording and reporting of the assessments for periods up to 7 months, unless otherwise required by D.2202 or D.2203. This delay permits the licensee or registrant to make additional measurements basic to the assessments.

e. If the identity and concentration of each radionuclide in a mixture are known, the fraction of the DAC applicable to the mixture for use in calculating DAC-hours shall be either:

   i. The sum of the ratios of the concentration to the appropriate DAC value, that is, D, W, or Y, from Appendix B for each radionuclide in the mixture; or

   ii. The ratio of the total concentration for all radionuclides in the mixture to the most restrictive DAC value for any radionuclide in the mixture.

f. If the identity of each radionuclide in a mixture is known, but the concentration of one or more of the radionuclides in the mixture is not known, the DAC for the mixture shall be the most restrictive DAC of any radionuclide in the mixture.

g. When a mixture of radionuclides in air exists, a licensee or registrant may disregard certain radionuclides in the mixture if:

   i. The licensee or registrant uses the total activity of the mixture in demonstrating compliance with the dose limits in D.1201 and in complying with the monitoring requirements in D.1502b.; and

   ii. The concentration of any radionuclide disregarded is less than 10 percent of its DAC; and

   iii. The sum of these percentages for all of the radionuclides disregarded in the mixture does not exceed 30 percent.

h. When determining the committed effective dose equivalent, the following information may be considered:

   i. In order to calculate the committed effective dose equivalent, the licensee or registrant may assume that the inhalation of one ALI, or an exposure of 2,000 DAC-hours, results in a committed effective dose equivalent of 0.05 Sievert (5 rem) for radionuclides that have their ALIs or DACs based on the committed effective dose equivalent;

   ii. For an ALI and the associated DAC determined by the nonstochastic organ dose limit of 0.5 Sievert (50 rem), the intake of radionuclides that would result in a committed effective dose equivalent of 0.05 Sievert (5 rem), that is, the stochastic ALI, is listed in parentheses in Table I of Appendix B. The licensee or registrant may, as a simplifying assumption, use the stochastic ALI to determine committed effective dose equivalent. However, if the licensee or registrant uses the stochastic ALI, the licensee or registrant shall also demonstrate that the limit in D.1201a.i.(2) is met.

<u>Sec. D.1206 - Planned Special Exposures.</u> A licensee or registrant may authorize an adult worker to receive doses in addition to and accounted for separately from the doses received under the limits specified in D.1201 provided that each of the following conditions is satisfied:

a. The licensee or registrant authorizes a planned special exposure only in an exceptional situation when alternatives that might avoid the dose estimated to result from the planned special exposure are unavailable or impractical;

b. The licensee or registrant, and employer if the employer is not the licensee or registrant, specifically authorizes the planned special exposure, in writing, before the exposure occurs;

c. Before a planned special exposure, the licensee or registrant ensures that each individual involved is:

   i. Informed of the purpose of the planned operation; and

   ii. Informed of the estimated doses and associated potential risks and specific radiation levels or other conditions that might be involved in performing the task; and

   iii. Instructed in the measures to be taken to keep the dose ALARA considering other risks that may be present;

d. Prior to permitting an individual to participate in a planned special exposure, the licensee or registrant ascertains prior doses as required by D.2104b. during the lifetime of the individual for each individual involved;

e. Subject to D.1201b., the licensee or registrant shall not authorize a planned special exposure that would cause an individual to receive a dose from all planned special exposures and all doses in excess of the limits to exceed:

   i. The numerical values of any of the dose limits in D.1201a. in any year; and

   ii. Five times the annual dose limits in D.1201a. during the individual's lifetime;

f. The licensee or registrant maintains records of the conduct of a planned special exposure in accordance with D.2105 and submits a written report in accordance with D.2204;

g. The licensee or registrant records the best estimate of the dose resulting from the planned special exposure in the individual's record and informs the individual, in writing, of the dose within 30 days from the date of the planned special exposure. The dose from planned special exposures shall not be considered in controlling future occupational dose of the individual pursuant to D.1201a. but shall be included in evaluations required by D.1206d. and e.

<u>Sec. D.1207 - Occupational Dose Limits for Minors.</u> The annual occupational dose limits for minors are 10 percent of the annual occupational dose limits specified for adult workers in D.1201.

<u>Sec. D.1208 - Dose Equivalent to an Embryo/Fetus.</u>

a. The licensee or registrant shall ensure that the dose equivalent to an embryo/fetus during the entire pregnancy, due to occupational exposure of a declared pregnant woman, does not

exceed 5 millisievert (0.5 rem). See D.2106d. for recordkeeping requirements.

b. The licensee or registrant shall make efforts to avoid substantial variation[*/] above a uniform monthly exposure rate to a declared pregnant woman so as to satisfy the limit in D.1208a.

c. The dose equivalent to the embryo/fetus is the sum of:

   i. The deep dose equivalent to the declared pregnant woman; and

   ii. The dose equivalent resulting from radionuclides in the embryo/fetus and radionuclides in the declared pregnant woman.

d. If the dose equivalent to the embryo/fetus is found to have exceeded 5 millisieverts (.5rem), or is within 0.5 millisieverts (0.05 rem) of this dose, by the time the woman declares the pregnancy to the licensee or registrant, the licensee or registrant shall be deemed to be in compliance with D.1208a. if the additional dose to the embryo/fetus does not exceed 0.5 millisievert (0.05 rem) during the remainder of the pregnancy.

Radiation Dose Limits for Individual Members of the Public

Sec. D.1301 - Dose Limits for Individual Members of the Public.

a. Each licensee or registrant shall conduct operations so that:

   i. The total effective dose equivalent to individual members of the public from the licensed or registered operation does not exceed 1 millisievert (0.1 rem) in a year, exclusive of the dose contribution from background radiation, from any medical administration the individual has received, from exposure to individuals administered radioactive material and released in accordance with [cite appropriate reference from Part G of these regulations], from voluntary participation in medical research programs, and from the licensee's or registrant's disposal of radioactive material into sanitary sewerage in accordance with D.2003;[**/] and

   ii. The dose in any unrestricted area from external sources exclusive of the dose contributions from patients administered radioactive material and released in accordance with [cite appropriate reference to Part G of these regulations], does not exceed 0.02 millisievert (0.002 rem) in any one hour; and

   iii. The total effective dose equivalent to individual members of the public from infrequent exposure to radiation from radiation machines does not exceed

---

[*/] *The National Council on Radiation Protection and Measurements recommended in NCRP Report No. 91 "Recommendations on Limits for Exposure to Ionizing Radiation" (June 1, 1987) that no more than 0.5 millisievert (0.05 rem) to the embryo/fetus be received in any one month.*

[**/] *Retrofit shall not be required for locations within facilities where only radiation machines existed prior to [the effective date of these regulations] and met the previous requirements of 5 millisievert (0.5 rem) in a year.*

5 millisievert (0.5 rem).

b. If the licensee or registrant permits members of the public to have access to restricted areas, the limits for members of the public continue to apply to those individuals.

c. A licensee, registrant, or an applicant for a license or registration may apply for prior Agency authorization to operate up to an annual dose limit for an individual member of the public of 5 millisievert (0.5 rem). This application shall include the following information:

i. Demonstration of the need for and the expected duration of operations in excess of the limit in D.1301a.; and

ii. The licensee's or registrant's program to assess and control dose within the 5 millisieverts (0.5 rem) annual limit; and

iii. The procedures to be followed to maintain the dose ALARA.

[d. In addition to the requirements of Part D, a licensee or registrant subject to the provisions of the Environmental Protection Agency's generally applicable environmental radiation standards in 40 CFR 190 shall comply with those standards.]

[e. The Agency may impose additional restrictions on radiation levels in unrestricted areas and on the total quantity of radionuclides that a licensee or registrant may release in effluents in order to restrict the collective dose.]

Sec. D.1302 - Compliance with Dose Limits for Individual Members of the Public.

a. The licensee or registrant shall make or cause to be made surveys of radiation levels in unrestricted areas and radioactive materials in effluents released to unrestricted areas to demonstrate compliance with the dose limits for individual members of the public in D.1301.

b. A licensee or registrant shall show compliance with the annual dose limit in D.1301 by:

i. Demonstrating by measurement or calculation that the total effective dose equivalent to the individual likely to receive the highest dose from the licensed or registered operation does not exceed the annual dose limit; or

ii. Demonstrating that:

(1) The annual average concentrations of radioactive material released in gaseous and liquid effluents at the boundary of the unrestricted area do not exceed the values specified in Table II of Appendix B; and

(2) If an individual were continuously present in an unrestricted area, the dose from external sources would not exceed 0.02 millisievert (0.002 rem) in an hour and 0.5 millisievert (0.05 rem) in a year.

c. Upon approval from the Agency, the licensee or registrant may adjust the effluent concentration values in Appendix B, Table II, for members of the public, to take into account the actual physical and chemical characteristics of the effluents, such as aerosol size distribution, solubility, density, radioactive decay equilibrium, and chemical form.

[Testing for Leakage or Contamination of Sealed Sources

Sec. D.1310 - Testing for Leakage or Contamination of Sealed Sources.

a. The licensee or registrant in possession of any sealed source shall assure that:

i. Each sealed source, except as specified in D.1310b., is tested for leakage or contamination and the test results are received before the sealed source is put into use unless the licensee or registrant has a certificate from the transferor indicating that the sealed source was tested within 6 months before transfer to the licensee or registrant;

ii. Each sealed source that is not designed to emit alpha particles is tested for leakage or contamination at intervals not to exceed 6 months or at alternative intervals approved by the Agency, after evaluation of information specified by C.28l.iv. and v. of these regulations, an Agreement State, a Licensing State, or the Nuclear Regulatory Commission;

iii. Each sealed source that is designed to emit alpha particles is tested for leakage or contamination at intervals not to exceed 3 months or at alternative intervals approved by the Agency, after evaluation of information specified by C.28l.iv. and v. of these regulations, an Agreement State, a Licensing State, or the Nuclear Regulatory Commission;

iv. For each sealed source that is required to be tested for leakage or contamination, at any other time there is reason to suspect that the sealed source might have been damaged or might be leaking, the licensee or registrant shall assure that the sealed source is tested for leakage or contamination before further use;

v. Tests for leakage for all sealed sources, except brachytherapy sources manufactured to contain radium, shall be capable of detecting the presence of 185 becquerel (0.005 ?Ci) of radioactive material on a test sample. Test samples shall be taken from the sealed source or from the surfaces of the container in which the sealed source is stored or mounted on which one might expect contamination to accumulate. For a sealed source contained in a device, test samples are obtained when the source is in the "off" position;

vi. The test for leakage for brachytherapy sources manufactured to contain radium shall be capable of detecting an absolute leakage rate of 37 becquerel (0.001 μCi) of radon-222 in a 24 hour period when the collection efficiency for radon-222 and its daughters has been determined with respect to collection method, volume and time;

vii. Tests for contamination from radium daughters shall be taken on the interior surface of brachytherapy source storage containers and shall be capable of detecting the presence of 185 becquerel (0.005 μCi) of a radium daughter which has a half-life greater than 4 days.

b. A licensee or registrant need not perform test for leakage or contamination on the following sealed sources:

i. Sealed sources containing only radioactive material with a half-life of less than 30 days;

ii. Sealed sources containing only radioactive material as a gas;

iii. Sealed sources containing 3.7 megabecquerel (100 μCi) or less of beta or photon-emitting material or 370 kilobecquerel(10 μCi) or less of alpha-emitting material;

iv. Sealed sources containing only hydrogen-3;

v. Seeds of iridium-192 encased in nylon ribbon; and

vi. Sealed sources, except teletherapy and brachytherapy sources, which are stored, not being used and identified as in storage. The licensee or registrant shall, however, test each such sealed source for leakage or contamination and receive the test results before any use or transfer unless it has been tested for leakage or contamination within 6 months before the date of use or transfer.

c. Tests for leakage or contamination from sealed sources shall be performed by persons specifically authorized by the Agency, an Agreement State, a Licensing State, or the Nuclear Regulatory Commission to perform such services.

d. Test results shall be kept in units of becquerel or microcurie and maintained for inspection by the Agency. Records of test results for sealed sources shall be made pursuant to D.1104.

e. The following shall be considered evidence that a sealed source is leaking:

i. The presence of 185 becquerel (0.005 μCi) or more of removable contamination on any test sample;

ii. Leakage of 37 becquerel (0.001 μCi) of radon-222 per 24 hours for brachytherapy sources manufactured to contain radium;

iii. The presence of removable contamination resulting from the decay of 185 becquerel (0.005 μCi) or more of radium.

f. The licensee or registrant shall immediately withdraw a leaking sealed source from use and shall take action to prevent the spread of contamination. The leaking sealed source shall be repaired or disposed of in accordance with this Part.

g. Reports of test results for leaking or contaminated sealed sources shall be made pursuant to D.2208.]

Surveys and Monitoring

Sec. D.1501 - General.

a. Each licensee or registrant shall make, or cause to be made, surveys that:

   i. Are necessary for the licensee or registrant to comply with Part D; and

   ii. Are necessary under the circumstances to evaluate:

      (1) The magnitude and extent of radiation levels; and

      (2) Concentrations or quantities of radioactive material; and

      (3) The potential radiological hazards.

b. The licensee or registrant shall ensure that instruments and equipment used for quantitative radiation measurements, for example, dose rate and effluent monitoring, are calibrated at intervals not to exceed 12 months for the radiation measured, except when a more frequent interval is specified in another applicable Part of these regulations or a license condition.

c. All personnel dosimeters, except for direct and indirect reading pocket ionization chambers and those dosimeters used to measure the dose to any extremity, that require processing to determine the radiation dose and that are used by licensees and registrants to comply with D.1201, with other applicable provisions of these regulations, or with conditions specified in a license or registration shall be processed and evaluated by a dosimetry processor:

   i. Holding current personnel dosimetry accreditation from the National Voluntary Laboratory Accreditation Program of the National Institute of Standards and Technology; and

   ii. Approved in this accreditation process for the type of radiation or radiations included in the National Voluntary Laboratory Accreditation Program that most closely approximates the type of radiation or radiations for which the individual wearing the dosimeter is monitored.

d. The licensee or registrant shall ensure that adequate precautions are taken to prevent a deceptive exposure of an individual monitoring device.

Sec. D.1502 - Conditions Requiring Individual Monitoring of External and Internal Occupational Dose. Each licensee or registrant shall monitor exposures from sources of radiation at levels sufficient to demonstrate compliance with the occupational dose limits of Part D. As a minimum:

a. Each licensee or registrant shall monitor occupational exposure to radiation from licensed and unlicensed radiation sources under its control and shall supply and require the use of individual monitoring devices by:

i. Adults likely to receive, in 1 year from sources external to the body, a dose in excess of 10 percent of the limits in D.1201a.; and

ii. Minors likely to receive, in 1 year from sources external to the body, a deep dose equivalent in excess of 1 millisievert (0.1 rem), a lens dose equivalent in excess of 1.5 millisievert (0.15 rem), or a shallow dose equivalent to the skin or to the extremities in excess of 5 millisievert (0.5 rem); and

iii. Declared pregnant women likely to receive during the entire pregnancy, from radiation sources external to the body, a deep dose equivalent in excess of 1 millisievert (0.1 rem); and

iv. Individuals entering a high or very high radiation area;

v. Individuals working with medical fluoroscopic equipment.

(1) An individual monitoring device used for the dose to an embryo/fetus of a declared pregnant woman, pursuant to D.1208a., shall be located under the protective apron at the waist.

(2) An individual monitoring device used for lense dose equivalent shall be located at the neck (collar), or an unshielded location closer to the eye, outside the protective apron.

(3) When only 1 individual monitoring device is used to determine the effective dose equivalent for external radiation pursuant to D.1201c.ii., it shall be located at the neck (collar) outside the protective apron. When a second individual monitoring device is used for the same purpose, it shall be located under the protective apron at the waist. The second individual monitoring device is required for a declared pregnant woman.

b. Each licensee or registrant shall monitor, to determine compliance with D.1204, the occupational intake of radioactive material by and assess the committed effective dose equivalent to:

i. Adults likely to receive, in 1 year, an intake in excess of 10 percent of the applicable ALI in Table I, Columns 1 and 2, of Appendix B; and

ii. Minors likely to receive, in 1 year, a committed effective dose equivalent in excess of 0.1 millisievert (0.01 rem).

iii. Declared pregnant women likely to receive, during the entire pregnancy, a committed dose equivalent in excess of 1 millisievert (0.1 rem).

Sec. D.1503 - Location of Individual Monitoring Devices. Each licensee or registrant shall ensure that individuals who are required to monitor occupational doses in accordance with D.1502a. wear individual monitoring devices as follows:

a. An individual monitoring device used for monitoring the dose to the whole body shall be worn at the unshielded location of the whole body likely to receive the highest exposure. When a protective apron is worn, the location of the individual monitoring device is typically at the neck (collar);

b. An individual monitoring device used for monitoring the dose to an embryo/fetus of a declared pregnant woman, pursuant to D.1208a., shall be located at the waist under any protective apron being worn by the woman;

c. An individual monitoring device used for monitoring the lens dose equivalent, to demonstrate compliance with D.1201a.ii.(1), shall be located at the neck (collar), outside any protective apron being worn by the monitored individual, or at an unshielded location closer to the eye;

d. An individual monitoring device used for monitoring the dose to the extremities, to demonstrate compliance with D.1201a.ii.(2), shall be worn on the extremity likely to receive the highest exposure. Each individual monitoring device shall be oriented to measure the highest dose to the extremity being monitored.

Control of Exposure from External Sources in Restricted Areas

Sec. D.1601 - Control of Access to High Radiation Areas.

a. The licensee or registrant shall ensure that each entrance or access point to a high radiation area has one or more of the following features:

   i. A control device that, upon entry into the area, causes the level of radiation to be reduced below that level at which an individual might receive a deep dose equivalent of 1 millisievert (0.1 rem) in 1 hour at 30 centimeters from the source of radiation or from any surface that the radiation penetrates; or

   ii. A control device that energizes a conspicuous visible or audible alarm signal so that the individual entering the high radiation area and the supervisor of the activity are made aware of the entry; or

   iii. Entryways that are locked, except during periods when access to the areas is required, with positive control over each individual entry.

b. In place of the controls required by D.1601a. for a high radiation area, the licensee or registrant may substitute continuous direct or electronic surveillance that is capable of

preventing unauthorized entry.

c. The licensee or registrant may apply to the Agency for approval of alternative methods for controlling access to high radiation areas.

d. The licensee or registrant shall establish the controls required by D.1601a. and D.1601c. in a way that does not prevent individuals from leaving a high radiation area.

e. The licensee or registrant is not required to control each entrance or access point to a room or other area that is a high radiation area solely because of the presence of radioactive materials prepared for transport and packaged and labeled in accordance with the regulations of the Department of Transportation provided that:

   i. The packages do not remain in the area longer than 3 days; and

   ii. The dose rate at 1 meter from the external surface of any package does not exceed 0.1 millisievert (0.01 rem) per hour.

f. The licensee or registrant is not required to control entrance or access to rooms or other areas in hospitals solely because of the presence of patients containing radioactive material, provided that there are personnel in attendance who are taking the necessary precautions to prevent the exposure of individuals to radiation or radioactive material in excess of the established limits in Part D and to operate within the ALARA provisions of the licensee's or registrant's radiation protection program.

g. The registrant is not required to control entrance or access to rooms or other areas containing sources of radiation capable of producing a high radiation area as described in D.1601 if the registrant has met all the specific requirements for access and control specified in other applicable Parts of these regulations, such as, Part E for industrial radiography, Part F for X-rays in the healing arts, and Part I for particle accelerators.

Sec. D.1602 - Control of Access to Very High Radiation Areas.

a. In addition to the requirements in D.1601, the licensee or registrant shall institute measures to ensure that an individual is not able to gain unauthorized or inadvertent access to areas in which radiation levels could be encountered at 5 gray (500 rad) or more in 1 hour at 1 meter from a source of radiation or any surface through which the radiation penetrates. This requirement does not apply to rooms or areas in which diagnostic X-ray systems are the only source of radiation, or to non-self-shielded irradiators.

b. The registrant is not required to control entrance or access to rooms or other areas containing sources of radiation capable of producing a very high radiation area as described in D.1602a. if the registrant has met all the specific requirements for access and control specified in other applicable Parts of these regulations, such as, Part E for industrial radiography, Part F for X-rays in the healing arts, and Part I for particle accelerators.

Sec. D.1603 - Control of Access to Very High Radiation Areas – Irradiators.

a. Section D.1603 applies to licensees or registrants with sources of radiation in non-self-shielded irradiators. Section D.1603 does not apply to sources of radiation that are used in teletherapy, in industrial radiography, or in completely self-shielded irradiators in which the source of radiation is both stored and operated within the same shielding radiation barrier and, in the designed configuration of the irradiator, is always physically inaccessible to any individual and cannot create high levels of radiation in an area that is accessible to any individual.

b. Each area in which there may exist radiation levels in excess of 5 gray (500 rad) in 1 hour at 1 meter from a source of radiation that is used to irradiate materials shall meet the following requirements:

i. Each entrance or access point shall be equipped with entry control devices which:

(1) Function automatically to prevent any individual from inadvertently entering a very high radiation area; and

(2) Permit deliberate entry into the area only after a control device is actuated that causes the radiation level within the area, from the source of radiation, to be reduced below that at which it would be possible for an individual to receive a deep dose equivalent in excess of 1 millisievert (0.1 rem) in 1 hour; and

(3) Prevent operation of the source of radiation if it would produce radiation levels in the area that could result in a deep dose equivalent to an individual in excess of 1 millisievert (0.1 rem) in 1 hour.

ii. Additional control devices shall be provided so that, upon failure of the entry control devices to function as required by D.1603b.i.:

(1) The radiation level within the area, from the source of radiation, is reduced below that at which it would be possible for an individual to receive a deep dose equivalent in excess of 1 millisievert (0.1 rem) in 1 hour; and

(2) Conspicuous visible and audible alarm signals are generated to make an individual attempting to enter the area aware of the hazard and at least one other authorized individual, who is physically present, familiar with the activity, and prepared to render or summon assistance, aware of the failure of the entry control devices.

iii. The licensee or registrant shall provide control devices so that, upon failure or removal of physical radiation barriers other than the sealed source's shielded storage container:

(1) The radiation level from the source of radiation is reduced below that at which it would be possible for an individual to receive a deep dose equivalent in

excess of 1 millisievert (0.1 rem) in 1 hour; and

(2) Conspicuous visible and audible alarm signals are generated to make potentially affected individuals aware of the hazard and the licensee or registrant or at least one other individual, who is familiar with the activity and prepared to render or summon assistance, aware of the failure or removal of the physical barrier.

iv. When the shield for stored sealed sources is a liquid, the licensee or registrant shall provide means to monitor the integrity of the shield and to signal, automatically, loss of adequate shielding.

v. Physical radiation barriers that comprise permanent structural components, such as walls, that have no credible probability of failure or removal in ordinary circumstances need not meet the requirements of D.1603b.iii. and D.1603b.iv.

vi. Each area shall be equipped with devices that will automatically generate conspicuous visible and audible alarm signals to alert personnel in the area before the source of radiation can be put into operation and in time for any individual in the area to operate a clearly identified control device, which must be installed in the area and which can prevent the source of radiation from being put into operation.

vii. Each area shall be controlled by use of such administrative procedures and such devices as are necessary to ensure that the area is cleared of personnel prior to each use of the source of radiation.

viii. Each area shall be checked by a radiation measurement to ensure that, prior to the first individual's entry into the area after any use of the source of radiation, the radiation level from the source of radiation in the area is below that at which it would be possible for an individual to receive a deep dose equivalent in excess of 1 millisievert (0.1 rem) in 1 hour.

ix. The entry control devices required in D.1603b.i. shall be tested for proper functioning. See D.2109 for recordkeeping requirements.

(1) Testing shall be conducted prior to initial operation with the source of radiation on any day, unless operations were continued uninterrupted from the previous day; and

(2) Testing shall be conducted prior to resumption of operation of the source of radiation after any unintentional interruption; and

(3) The licensee or registrant shall submit and adhere to a schedule for periodic tests of the entry control and warning systems.

x. The licensee or registrant shall not conduct operations, other than those necessary to place the source of radiation in safe condition or to effect repairs on controls, unless

control devices are functioning properly.

xi. Entry and exit portals that are used in transporting materials to and from the irradiation area, and that are not intended for use by individuals, shall be controlled by such devices and administrative procedures as are necessary to physically protect and warn against inadvertent entry by any individual through these portals. Exit portals for irradiated materials shall be equipped to detect and signal the presence of any loose radioactive material that is carried toward such an exit and automatically to prevent loose radioactive material from being carried out of the area.

c. Licensees, registrants, or applicants for licenses or registrations for sources of radiation within the purview of D.1603b. which will be used in a variety of positions or in locations, such as open fields or forests, that make it impracticable to comply with certain requirements of D.1603b., such as those for the automatic control of radiation levels, may apply to the Agency for approval of alternative safety measures. Alternative safety measures shall provide personnel protection at least equivalent to those specified in D.1603b. At least one of the alternative measures shall include an entry-preventing interlock control based on a measurement of the radiation that ensures the absence of high radiation levels before an individual can gain access to the area where such sources of radiation are used.

d. The entry control devices required by D.1603b. and c. shall be established in such a way that no individual will be prevented from leaving the area.

Respiratory Protection and Controls to Restrict Internal Exposure in Restricted Areas

Sec. D.1701 - Use of Process or Other Engineering Controls. The licensee or registrant shall use, to the extent practical, process or other engineering controls, such as, containment, decontamination or ventilation, to control the concentrations of radioactive material in air.

Sec. D.1702 - Use of Other Controls.

a. When it is not practicable to apply process or other engineering controls to control the concentrations of radioactive material in air to values below those that define an airborne radioactivity area, the licensee or registrant shall, consistent with maintaining the total effective dose equivalent ALARA, increase monitoring and limit intakes by one or more of the following means:

i. Control of access; or

ii. Limitation of exposure times; or

iii.. Use of respiratory protection equipment; or

iv. Other controls.

b. If the licensee performs an ALARA analysis to determine whether or not respirators should

be used, the licensee may also consider the impact of respirator use on workers' industrial health and safety.

Sec. D.1703 - Use of Individual Respiratory Protection Equipment. If the licensee or registrant uses respiratory protection equipment to limit intakes pursuant to D.1702:

a. Except as provided in D.1703a.ii., the licensee or registrant shall use only respiratory protection equipment that is tested and certified by the National Institute for Occupational Safety and Health;

b. If the licensee or registrant wishes to use equipment that has not been tested or certified by the National Institute for Occupational Safety, or for which there is no schedule for testing or certification, the licensee shall submit an application to the Agency for authorized use of this equipment, except as otherwise noted in this Part. The application must include evidence that the material and performance characteristics of the equipment are capable of providing the proposed degree of protection under anticipated conditions of use. This must be demonstrated either by the licensee's or registrant's testing or on the basis of reliable test information;

c. The licensee or registrant shall implement and maintain a respiratory protection program that includes:

    i. Air sampling sufficient to identify the potential hazard, permit proper equipment selection, and estimate doses;

    ii. Surveys and bioassays, as necessary, to evaluate actual intakes;

    iii. Testing of respirators for operability (user seal check for face sealing devices and functional check for others) immediately prior to each use; and

    iv. Written procedures regarding:

        (1) Monitoring, including air sampling and bioassays;

        (2) Supervision and training or respirator users;

        (3) Fit testing;

        (4) Respirator selection;

        (5) Breathing air quality;

        (6) Inventory and control;

        (7) Storage, issuance, maintenance, repair, testing, and quality assurance of respiratory protection equipment;

(8) Recordkeeping; and

(9) Limitations on periods of respirator use and relief from respirator use.

v. Determination by a physician that the individual user is medically fit to use the respiratory protection equipment before:

(1) The initial fitting of a face sealing respirator;

(2) Before the first field use of non-face sealing respirators, and

(3) Either every 12 months thereafter, or periodically at a frequency determined by a physician.

vi. Fit testing, with a fit factor ? 10 times the APF for negative pressure devices, and a fit factor ? 500 for any positive pressure, continuous flow, and pressure-demand devices, before the first field use of tight fitting, face sealing respirators and periodically thereafter at a frequency not to exceed 1 year. Fit testing must be performed with the facepiece operating in the negative pressure mode.

d. The licensee or registrant shall advise each respirator user that the user may leave the area at any time for relief from respirator use in the event of equipment malfunction, physical or psychological distress, procedural or communication failure, significant deterioration of operating conditions, or any other conditions that might require such relief.

e. The licensee or registrant shall also consider limitations appropriate to the type and mode of use. When selecting respiratory devices the licensee or registrant shall provide for vision correction, adequate communication, low temperature work environments and the concurrent use of other safety or radiological protection equipment. The licensee or registrant shall use equipment in such a way as not to interfere with the proper operation of the respirator.

f. Standby rescue persons are required whenever one-piece atmosphere-supplying suits, or any combination of supplied air respiratory protection device and personnel protective equipment are used from which an unaided individual would have difficulty extricating himself or herself. The standby persons must be equipped with respiratory protection devices or other apparatus appropriate for the potential hazards. The standby rescue persons shall observe or otherwise maintain continuous communication with the workers (visual, voice, signal line, telephone, radio, or other suitable means), and be immediately available to assist them in case of a failure of the air supply or for any other reason that requires relief from distress. A sufficient number of standby rescue persons must be immediately available to assist all users of this type of equipment and to provide effective emergency rescue if needed.

g. Atmosphere-supplying respirators must be supplied with respirable air of grade D quality or better as defined by the Compressed Gas Association in publication G-7.1, "Commodity Specification for Air," 1997 and included in the regulations of the Occupational Safety and Health Administration (29 CFR 1910.134(i)(1)(ii)(A) through (E). Grade D quality air criteria include:

i. Oxygen content (v/v) of 19.5-23.5%;

ii. Hydrocarbon (condensed) content of 5 milligrams per cubic meter of air or less;

iii. Carbon Monoxide (CO) content of 10 ppm or less;

iv. Carbon Dioxide content of 1,000 ppm or less; and

v. Lack of noticeable odor

h. The licensee shall ensure that no objects, materials or substances, such as facial hair, or any conditions that interfere with the face-facepiece seal or valve function, and that are under the control of the wearer, are present between the skin of the wearer's face and the sealing surface of a tight-fitting respirator facepiece.

i. In estimating the dose to individuals from intake of airborne radioactive materials, the concentration of radioactive material in the air that is inhaled when respirators are worn is initially assumed to be the ambient concentration in air without the respiratory protection, divided by the assigned protection factor. If the dose is later found to be greater than the estimated dose, the corrected value must be used. If the dose is later found to be less than the estimated dose, the corrected value may be used.

Sec. D.1704 – Further Restrictions on the Use of Respiratory Protection Equipment. The Agency may impose restrictions in addition to the provisions of D.1702 and D.1703, and Appendix A of this Part, in order to:

a. Ensure that the respiratory protection program of the licensee is adequate to limit doses to individuals from intakes of radioactive materials consistent with maintaining total effective dose equivalent ALARA; and

b. Limit the extent to which a licensee may use respiratory protection equipment instead of process or other engineering controls.

Sec. D.1705 – Application for use of Higher Assigned Protection Factors. The licensee or registrant shall obtain authorization from the Agency before using assigned respiratory protection factors in excess of those specified in Appendix A. The Agency may authorize a licensee or registrant to use higher protection factors on receipt of an application that:

a. Describes the situation for which a need exists for higher protection factors; and

b. Demonstrates that the respiratory protection equipment provides these higher protection factors under the proposed conditions of use.

Storage and Control of Licensed or Registered Sources of Radiation

Sec. D.1801 - Security and Control of Licensed or Registered Sources of Radiation.

a. The licensee or registrant shall secure licensed or registered radioactive material from unauthorized removal or access.

b. The licensee or registrant shall maintain constant surveillance, and use devices or administrative procedures to prevent unauthorized use of licensed or registered radioactive material that is in an unrestricted area and that is not in storage.

c. The registrant shall secure registered radiation machines from unauthorized removal.

d. The registrant shall use devices or administrative procedures to prevent unauthorized use of registered radiation machines.

Precautionary Procedures

Sec. D.1901 - Caution Signs.

a. Standard Radiation Symbol. Unless otherwise authorized by the Agency, the symbol prescribed by this section shall use the colors magenta, or purple, or black on yellow background. The symbol prescribed is the three-bladed design as follows:

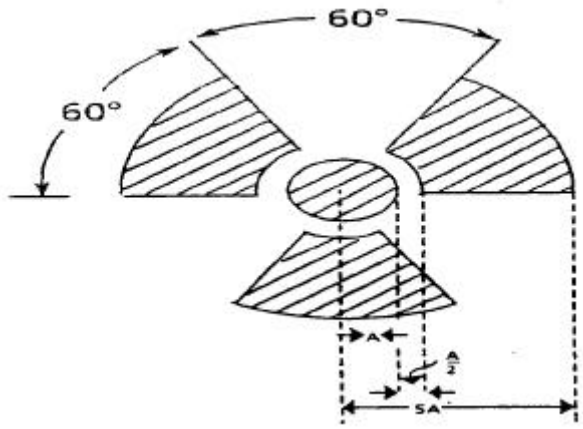

1. Cross-hatched area is to be magenta, or purple, or black, and
2. The background is to be yellow.

Figure 1. Radiation Symbol.

b. Exception to Color Requirements for Standard Radiation Symbol. Notwithstanding the requirements of D.1901a., licensees or registrants are authorized to label sources, source holders, or device components containing sources of radiation that are subjected to high temperatures, with conspicuously etched or stamped radiation caution symbols and without a

color requirement.

c. Additional Information on Signs and Labels. In addition to the contents of signs and labels prescribed in Part D, the licensee or registrant may provide, on or near the required signs and labels, additional information, as appropriate, to make individuals aware of potential radiation exposures and to minimize the exposures.

Sec. D.1902 - Posting Requirements.

a. Posting of Radiation Areas. The licensee or registrant shall post each radiation area with a conspicuous sign or signs bearing the radiation symbol and the words "CAUTION, RADIATION AREA."

b. Posting of High Radiation Areas. The licensee or registrant shall post each high radiation area with a conspicuous sign or signs bearing the radiation symbol and the words "CAUTION, HIGH RADIATION AREA" or "DANGER, HIGH RADIATION AREA."

c. Posting of Very High Radiation Areas. The licensee or registrant shall post each very high radiation area with a conspicuous sign or signs bearing the radiation symbol and words "GRAVE DANGER [not required to use the word GRAVE , this may be omitted], VERY HIGH RADIATION AREA."

d. Posting of Airborne Radioactivity Areas. The licensee or registrant shall post each airborne radioactivity area with a conspicuous sign or signs bearing the radiation symbol and the words "CAUTION, AIRBORNE RADIOACTIVITY AREA" or "DANGER, AIRBORNE RADIOACTIVITY AREA."

e. Posting of Areas or Rooms in which Licensed or Registered Material is Used or Stored. The licensee or registrant shall post each area or room in which there is used or stored an amount of licensed or registered material exceeding 10 times the quantity of such material specified in Appendix C with a conspicuous sign or signs bearing the radiation symbol and the words "CAUTION, RADIOACTIVE MATERIAL(S)" or "DANGER, RADIOACTIVE MATERIAL(S)."

Sec. D.1903 - Exceptions to Posting Requirements.

a. A licensee or registrant is not required to post caution signs in areas or rooms containing sources of radiation for periods of less than 8 hours, if each of the following conditions is met:

   i. The sources of radiation are constantly attended during these periods by an individual who takes the precautions necessary to prevent the exposure of individuals to sources of radiation in excess of the limits established in Part D; and

   ii. The area or room is subject to the licensee's or registrant's control.

b. Rooms or other areas in hospitals that are occupied by patients are not required to be posted

with caution signs pursuant to D.1902 provided that the patient could be released from confinement pursuant to [cite applicable Part G reference] of these regulations are met.

c. Rooms or other areas in hospitals that are occupied by patients are not required to be posted with caution signs, provided that:

   i. A patient being treated with a permanent implant could be released from confinement pursuant to [cite applicable Part G reference] of these regulations; or

   ii. A patient being treated with a therapeutic radiopharmaceutical could be released from confinement pursuant to [cite applicable Part G reference] of these regulations.

d. A room or area is not required to be posted with a caution sign because of the presence of a sealed source provided the radiation level at 30 centimeters from the surface of the sealed source container or housing does not exceed 0.05 millisievert (0.005 rem) per hour.

e. A room or area is not required to be posted with a caution sign because of the presence of radiation machines used solely for diagnosis in the healing arts.

f. Rooms in hospitals or clinics that are used for teletherapy are exempt from the requirement to post caution signs under D.1902 if:

   i. Access to the room is controlled pursuant to [cite applicable Part G reference]; and

   ii. Personnel in attendance take necessary precautions to prevent the inadvertent exposure of workers, other patients, and members of the public to radiation in excess of the limits established in this Part.

Sec. D.1904 - Labeling Containers and Radiation Machines.

a. The licensee or registrant shall ensure that each container of licensed or registered material bears a durable, clearly visible label bearing the radiation symbol and the words "CAUTION, RADIOACTIVE MATERIAL" or "DANGER, RADIOACTIVE MATERIAL." The label shall also provide information, such as the radionuclides present, an estimate of the quantity of radioactivity, the date for which the activity is estimated, radiation levels, kinds of materials, and mass enrichment, to permit individuals handling or using the containers, or working in the vicinity of the containers, to take precautions to avoid or minimize exposures.

b. Each licensee or registrant shall, prior to removal or disposal of empty uncontaminated containers to unrestricted areas, remove or deface the radioactive material label or otherwise clearly indicate that the container no longer contains radioactive materials.

c. Each registrant shall ensure that each radiation machine is labeled in a conspicuous manner which cautions individuals that radiation is produced when it is energized.

Sec. D.1905 - Exemptions to Labeling Requirements. A licensee or registrant is not required to label:

a. Containers holding licensed or registered material in quantities less than the quantities listed in Appendix C; or

b. Containers holding licensed or registered material in concentrations less than those specified in Table III of Appendix B; or

c. Containers attended by an individual who takes the precautions necessary to prevent the exposure of individuals in excess of the limits established by Part D; or

d. Containers when they are in transport and packaged and labeled in accordance with the regulations of the Department of Transportation;[2/] or

e. Containers that are accessible only to individuals authorized to handle or use them, or to work in the vicinity of the containers, if the contents are identified to these individuals by a readily available written record. Examples of containers of this type are containers in locations such as water-filled canals, storage vaults, or hot cells. The record shall be retained as long as the containers are in use for the purpose indicated on the record; or

f. Installed manufacturing or process equipment, such as piping and tanks.

Sec. D.1906 - Procedures for Receiving and Opening Packages.

a. Each licensee or registrant who expects to receive a package containing quantities of radioactive material in excess of a Type A quantity, as defined in T.2 and Appendix A of Part T of these regulations, shall make arrangements to receive:

   i. The package when the carrier offers it for delivery; or

   ii. The notification of the arrival of the package at the carrier's terminal and to take possession of the package expeditiously.

b. Each licensee or registrant shall:

   i. Monitor the external surfaces of a labeled[3/] package for radioactive contamination unless the package contains only radioactive material in the form of gas or in special form as defined in A.2 of these regulations; and

   ii. Monitor the external surfaces of a labeled[3/] package for radiation levels unless the

---

[2/] *Labeling of packages containing radioactive materials is required by the Department of Transportation if the amount and type of radioactive material exceeds the limits for an excepted quantity or article as defined and limited by Department of Transportation regulations 49 CFR 173.403(m) and (w) and 173.421-424.*

[3/] *Labeled means labeled with a Radioactive White I, Yellow II, or Yellow III label as specified in Department of Transportation regulations 49 CFR 172.403 and 172.436-440.*

package contains quantities of radioactive material that are less than or equal to the Type A quantity, as defined in T.2 and Appendix A of Part T of these regulations; and

iii. Monitor all packages known to contain radioactive material for radioactive contamination and radiation levels if there is evidence of degradation of package integrity, such as packages that are crushed, wet, or damaged.

c. The licensee or registrant shall perform the monitoring required by D.1906b. as soon as practicable after receipt of the package, but not later than 3 hours after the package is received at the licensee's or registrant's facility if it is received during the licensee's or registrant's normal working hours or if there is evidence of degradation of package integrity, such as a package that is crushed, wet, or damaged. If a package is received after working hours, and has no evidence of degradation of package integrity, the package shall be monitored no later than 3 hours from the beginning of the next working day.

d. The licensee or registrant shall immediately notify the final delivery carrier and, by telephone and either telegram, mailgram, or facsimile, the Agency when:

i. Removable radioactive surface contamination exceeds the limits of T.15h. of these regulations; or

ii. External radiation levels exceed the limits of T.15i. and j. of these regulations.

e. Each licensee or registrant shall:

i. Establish, maintain, and retain written procedures for safely opening packages in which radioactive material is received; and

ii. Ensure that the procedures are followed and that due consideration is given to special instructions for the type of package being opened.

f. Licensees or registrants transferring special form sources in vehicles owned or operated by the licensee or registrant to and from a work site are exempt from the contamination monitoring requirements of D.1906b., but are not exempt from the monitoring requirement in D.1906b. for measuring radiation levels that ensures that the source is still properly lodged in its shield.

Waste Disposal

Sec. D.2001 - General Requirements.

a. A licensee or registrant shall dispose of licensed or registered material only:

i. By transfer to an authorized recipient as provided in D.2006 or in Parts C, M, or U[***/] of these regulations, or to the Department of Energy; or

[***/] *Part U is in draft form.*

ii. By decay in storage; or

iii. By release in effluents within the limits in D.1301; or

iv. As authorized pursuant to D.2002, D.2003, D.2004, or D.2005.

b. A person shall be specifically licensed or registered to receive waste containing licensed or registered material from other persons for:

i. Treatment prior to disposal; or

ii. Treatment or disposal by incineration; or

iii. Decay in storage; or

iv. Disposal at a land disposal facility licensed pursuant to Part M of these regulations; or

v. Storage until transferred to a storage or disposal facility authorized to receive the waste.

Sec. D.2002 - Method for Obtaining Approval of Proposed Disposal Procedures. A licensee or registrant or applicant for a license or registration may apply to the Agency for approval of proposed procedures, not otherwise authorized in these regulations, to dispose of licensed or registered material generated in the licensee's or registrant's operations. Each application shall include:

a. A description of the waste containing licensed or registered material to be disposed of, including the physical and chemical properties that have an impact on risk evaluation, and the proposed manner and conditions of waste disposal; and

b. An analysis and evaluation of pertinent information on the nature of the environment; and

c. The nature and location of other potentially affected facilities; and

d. Analyses and procedures to ensure that doses are maintained ALARA and within the dose limits in Part D.

Sec. D.2003 - Disposal by Release into Sanitary Sewerage.

a. A licensee or registrant may discharge licensed or registered material into sanitary sewerage if each of the following conditions is satisfied:

i. The material is readily soluble, or is readily dispersible biological material, in water; and

ii. The quantity of licensed or registered radioactive material that the licensee or registrant releases into the sewer in 1 month divided by the average monthly volume

of water released into the sewer by the licensee or registrant does not exceed the concentration listed in Table III of Appendix B; and

iii. If more than one radionuclide is released, the following conditions must also be satisfied:

(1) The licensee or registrant shall determine the fraction of the limit in Table III of Appendix B represented by discharges into sanitary sewerage by dividing the actual monthly average concentration of each radionuclide released by the licensee or registrant into the sewer by the concentration of that radionuclide listed in Table III of Appendix B; and

(2) The sum of the fractions for each radionuclide required by D.2003a.iii.(1) does not exceed unity; and

iv. The total quantity of licensed or registered radioactive material that the licensee or registrant releases into the sanitary sewerage in a year does not exceed 185 Gigabecquerel (5 Ci) of hydrogen-3, 37 Gigabecquerel (1 Ci) of carbon-14, and 37 Gigabecquerel (1 Ci) of all other radioactive materials combined.

b. Excreta from individuals undergoing medical diagnosis or therapy with radioactive material are not subject to the limitations contained in D.2003a.

Sec. D.2004 - Treatment or Disposal by Incineration. A licensee or registrant may treat or dispose of licensed or registered material by incineration only in the form and concentration specified in D.2005 or as specifically approved by the Agency pursuant to D.2002.

Sec. D.2005 - Disposal of Specific Wastes.

a. A licensee or registrant may dispose of the following licensed or registered material as if it were not radioactive:

i. 1.85 kilobecquerel (0.05 μCi), or less, of hydrogen-3 or carbon-14 per gram of medium used for liquid scintillation counting; and

ii. 1.85 kilobecquerel (0.05 μCi), or less, of hydrogen-3 or carbon-14 per gram of animal tissue, averaged over the weight of the entire animal.

b. A licensee or registrant shall not dispose of tissue pursuant to D.2005a.ii. in a manner that would permit its use either as food for humans or as animal feed.

c. The licensee or registrant shall maintain records in accordance with D.2108.

Sec. D.2006 - Transfer for Disposal and Manifests.

a. Requirements of D.2006 and Appendix G.

i. Control transfers of low-level radioactive waste by any waste generator, waste collector, or waste processor licensee, as defined in Appendix G of Part D, who ships low-level waste either directly, or indirectly through a waste collector or waste processor, to a licensed low-level waste land disposal facility as defined in Part A.2 of these regulations.

ii. Establish a manifest tracking system; and

iii. Supplement existing requirements concerning transfers and recordkeeping for those wastes

b. Shipment of Radioactive Waste. Any licensee shipping radioactive waste intended for ultimate disposal at a licensed land disposal facility must document the information required on the Agency's Uniform Low-Level Radioactive Waste Manifest and transfer this recorded information to the intended consignee in accordance with Appendix G.

c. Each shipment manifest shall include a certification by the waste generator as specified in Appendix G, as appropriate;

d. Each person involved in the transfer of waste for disposal or in the disposal of waste, including the waste generator, waste collector, waste processor, and disposal facility operator, shall comply with the requirements specified in Appendix G, as appropriate.

Sec. D.2007 - Compliance with Environmental and Health Protection Regulations. Nothing in D.2001, D.2002, D.2003, D.2004, D.2005, or D.2006 relieves the licensee or registrant from complying with other applicable Federal, State and local regulations governing any other toxic or hazardous properties of materials that may be disposed of in accordance with D.2001, D.2002, D.2003, D.2004, D.2005, or D.2006.

Records

Sec. D.2101 - General Provisions.

a. Each licensee or registrant shall use the SI units becquerel, gray, sievert and coulomb per kilogram, or the special units curie, rad, rem and roentgen, including multiples and subdivisions, and shall clearly indicate the units of all quantities on records required by Part D.

b. Not withstanding the requirements of D.2101a, when recording information on shipment manifests, as required in D.2006, information must be recorded in SI units or in SI units and special units as specified in D.2101a.

c. The licensee or registrant shall make a clear distinction among the quantities entered on the records required by Part D, such as, total effective dose equivalent shallow dose equivalent, lens dose equivalent, deep dose equivalent, or committed effective dose equivalent.

Sec. D.2102 - Records of Radiation Protection Programs.

a. Each licensee or registrant shall maintain records of the radiation protection program, including:

   i. The provisions of the program; and

   ii. Audits and other reviews of program content and implementation.

b. The licensee or registrant shall retain the records required by D.2102a.i. until the Agency terminates each pertinent license or registration requiring the record. The licensee or registrant shall retain the records required by D.2102a.ii. for 3 years after the record is made.

Sec. D.2103 - Records of Surveys.

a. Each licensee or registrant shall maintain records showing the results of surveys and calibrations required by D.1501 and D.1906b. The licensee or registrant shall retain these records for 3 years after the record is made.

b. The licensee or registrant shall retain each of the following records until the Agency terminates each pertinent license or registration requiring the record:

   i. Records of the results of surveys to determine the dose from external sources of radiation used, in the absence of or in combination with individual monitoring data, in the assessment of individual dose equivalents; and

   ii. Records of the results of measurements and calculations used to determine individual intakes of radioactive material and used in the assessment of internal dose; and

   iii. Records showing the results of air sampling, surveys, and bioassays required pursuant to D.1703c.i. and ii. and;

   iv. Records of the results of measurements and calculations used to evaluate the release of radioactive effluents to the environment.

Sec. D.2104 - Determination and Records of Prior Occupational Dose.

a. For each individual who is likely to receive, in a year, an occupational dose requiring monitoring pursuant to D.1502, the licensee or registrant shall:

   i. Determine the occupational radiation dose received during the current year; and

   ii. Attempt to obtain the records of cumulative occupational radiation dose.

b. Prior to permitting an individual to participate in a planned special exposure, the licensee or registrant shall determine:

i. The internal and external doses from all previous planned special exposures; and

ii. All doses in excess of the limits, including doses received during accidents and emergencies, received during the lifetime of the individual; and

c. In complying with the requirements of D.2104a., a licensee or registrant may:

i. Accept, as a record of the occupational dose that the individual received during the current year, a written signed statement from the individual, or from the individual's most recent employer for work involving radiation exposure, that discloses the nature and the amount of any occupational dose that the individual received during the current year; and

ii. Accept, as the record of cumulative radiation dose, an up-to-date Agency Form Y or equivalent, signed by the individual and countersigned by an appropriate official of the most recent employer for work involving radiation exposure, or the individual's current employer, if the individual is not employed by the licensee or registrant; and.

iii. Obtain reports of the individual's dose equivalent(s) from the most recent employer for work involving radiation exposure, or the individual's current employer, if the individual is not employed by the licensee or registrant, by telephone, telegram, facsimile, other electronic media or letter. The licensee or registrant shall request a written verification of the dose data if the authenticity of the transmitted report cannot be established.

d. The licensee or registrant shall record the exposure history, as required by D.2104a., on Agency Form Y, or other clear and legible record, of all the information required on that form.

i. The form or record shall show each period in which the individual received occupational exposure to radiation or radioactive material and shall be signed by the individual who received the exposure. For each period for which the licensee or registrant obtains reports, the licensee or registrant shall use the dose shown in the report in preparing Agency form Y or equivalent. For any period in which the licensee or registrant does not obtain a report, the licensee or registrant shall place a notation on Agency Form Y or equivalent indicating the periods of time for which data are not available.

ii. For the purposes of complying with this requirement, licensees or registrants are not required to partition historical dose between external dose equivalent(s) and internal committed dose equivalent(s). Further, occupational exposure histories obtained and recorded on Agency Form Y or equivalent before [cite effective date of these regulations], would not have included effective dose equivalent, but may be used in the absence of specific information on the intake of radionuclides by the individual.

e. If the licensee or registrant is unable to obtain a complete record of an individual's current and previously accumulated occupational dose, the licensee or registrant shall assume:

i. In establishing administrative controls pursuant to D.1201f. for the current year, that

the allowable dose limit for the individual is reduced by 12.5 millisievert (1.25 rem) for each quarter for which records were unavailable and the individual was engaged in activities that could have resulted in occupational radiation exposure; and

ii. That the individual is not available for planned special exposures.

f. The licensee or registrant shall retain the records on AGENCY FORM Y or equivalent until the Agency terminates each pertinent license or registration requiring this record. The licensee or registrant shall retain records used in preparing AGENCY FORM Y or equivalent for 3 years after the record is made.

g. Upon termination of the license or registration, the licensee or registrant shall permanently store records on AGENCY FORM Y or equivalent, or shall make provision with the Agency for transfer to the Agency.

Sec. D.2105 - Records of Planned Special Exposures.

a. For each use of the provisions of D.1206 for planned special exposures, the licensee or registrant shall maintain records that describe:

i. The exceptional circumstances requiring the use of a planned special exposure; and

ii. The name of the management official who authorized the planned special exposure and a copy of the signed authorization; and

iii. What actions were necessary; and

iv. Why the actions were necessary; and

v. What precautions were taken to assure that doses were maintained ALARA; and

vi. What individual and collective doses were expected to result; and

vii. The doses actually received in the planned special exposure.

b. The licensee or registrant shall retain the records until the Agency terminates each pertinent license or registration requiring these records.

[c. Upon termination of the license or registration, the licensee or registrant shall permanently store records on Agency Form Y or equivalent, or shall make provision with the Agency for transfer to the Agency.]

Sec. D.2106 - Records of Individual Monitoring Results.

a. Recordkeeping Requirement. Each licensee or registrant shall maintain records of doses received by all individuals for whom monitoring was required pursuant to D.1502, and records of doses received during planned special exposures, accidents, and emergency conditions. Assessments of dose equivalent and records made using units in effect before

[the effective date of Part D] need not be changed. These records shall include, when applicable:

i. The deep dose equivalent to the whole body, lens dose equivalent, shallow dose equivalent to the skin, and shallow dose equivalent to the extremities; and

ii. The estimated intake of radionuclides, see D.1202; and

iii. The committed effective dose equivalent assigned to the intake of radionuclides; and

iv. The specific information used to calculate the committed effective dose equivalent pursuant to D.1204a. and D.1204c. and when required by D.1502; and

v. The total effective dose equivalent when required by D.1202; and

vi. The total of the deep dose equivalent and the committed dose to the organ receiving the highest total dose.

b. Recordkeeping Frequency. The licensee or registrant shall make entries of the records specified in D.2106a. at intervals not to exceed 1 year.

c. Recordkeeping Format. The licensee or registrant shall maintain the records specified in D.2106a. on Agency Form Z, in accordance with the instructions for Agency Form Z, or in clear and legible records containing all the information required by Agency Form Z.

d. The licensee or registrant shall maintain the records of dose to an embryo/fetus with the records of dose to the declared pregnant woman. The declaration of pregnancy, including the estimated date of conception, shall also be kept on file, but may be maintained separately from the dose records.

e. The licensee or registrant shall retain each required form or record until the Agency terminates each pertinent license or registration requiring the record.

[f. Upon termination of the license or registration, the licensee or registrant shall permanently store records on Agency Form Y or equivalent, or shall make provision with the Agency for transfer to the Agency.]

Sec. D.2107 - Records of Dose to Individual Members of the Public.

a. Each licensee or registrant shall maintain records sufficient to demonstrate compliance with the dose limit for individual members of the public. See D.1301.

b. The licensee or registrant shall retain the records required by D.2107a. until the Agency terminates each pertinent license or registration requiring the record.

Sec. D. 2108 - Records of Waste Disposal.

a. Each licensee or registrant shall maintain records of the disposal of licensed or registered materials made pursuant to D.2002, D.2003, D.2004, D.2005, Part M of these regulations, and disposal by burial in soil, including burials authorized before [insert effective date of rule that removed the authorization].[4/]

b. The licensee or registrant shall retain the records required by D.2108a. until the Agency terminates each pertinent license or registration requiring the record.

Sec. D.2109 - Records of Testing Entry Control Devices for Very High Radiation Areas.

a. Each licensee or registrant shall maintain records of tests made pursuant to D.1603b.ix. on entry control devices for very high radiation areas. These records must include the date, time, and results of each such test of function.

b. The licensee or registrant shall retain the records required by D.2109a. for 3 years after the record is made.

Sec. D.2110 - Form of Records. Each record required by Part D shall be legible throughout the specified retention period. The record shall be the original or a reproduced copy or a microform, provided that the copy or microform is authenticated by authorized personnel and that the microform is capable of producing a clear copy throughout the required retention period or the record may also be stored in electronic media with the capability for producing legible, accurate, and complete records during the required retention period. Records, such as letters, drawings, and specifications, shall include all pertinent information, such as stamps, initials, and signatures. The licensee shall maintain adequate safeguards against tampering with and loss of records.

Sec. D.2111 - Records of Tests for Leakage or Contamination of Sealed Sources. Records of tests for leakage or contamination of sealed sources required by D.310 shall be kept in units of becquerel or microcurie and maintained for inspection by the Agency for 5 years after the records are made.

Reports

Sec. D.2201 - Reports of Stolen, Lost, or Missing Licensed or Registered Sources of Radiation.

a. Telephone Reports. Each licensee or registrant shall report to the Agency by telephone as follows:

i. Immediately after its occurrence becomes known to the licensee or registrant, stolen, lost, or missing licensed or registered radioactive material in an aggregate quantity equal to or greater than 1,000 times the quantity specified in Appendix C under such circumstances that it appears to the licensee or registrant that an exposure could result

---

[4/] *A previous D.304 permitted burial of small quantities of licensed materials in soil before [date of rule that removed authorization], without specific Agency authorization.*

to individuals in unrestricted areas; or

ii. Within 30 days after its occurrence becomes known to the licensee or registrant, lost, stolen, or missing licensed or registered radioactive material in an aggregate quantity greater than 10 times the quantity specified in Appendix C that is still missing;

iii. Immediately after its occurrence becomes known to the registrant, a stolen, lost, or missing radiation machine.

b. Written Reports. Each licensee or registrant required to make a report pursuant to D.2201a. shall, within 30 days after making the telephone report, make a written report to the Agency setting forth the following information:

i. A description of the licensed or registered source of radiation involved, including, for radioactive material, the kind, quantity, and chemical and physical form; and, for radiation machines, the manufacturer, model and serial number, type and maximum energy of radiation emitted;

ii. A description of the circumstances under which the loss or theft occurred; and

iii. A statement of disposition, or probable disposition, of the licensed or registered source of radiation involved; and

iv. Exposures of individuals to radiation, circumstances under which the exposures occurred, and the possible total effective dose equivalent to persons in unrestricted areas; and

v. Actions that have been taken, or will be taken, to recover the source of radiation; and

vi. Procedures or measures that have been, or will be, adopted to ensure against a recurrence of the loss or theft of licensed or registered sources of radiation.

c. Subsequent to filing the written report, the licensee or registrant shall also report additional substantive information on the loss or theft within 30 days after the licensee or registrant learns of such information.

d. The licensee or registrant shall prepare any report filed with the Agency pursuant to D.2201 so that names of individuals who may have received exposure to radiation are stated in a separate and detachable portion of the report.

Sec. D.2202 - Notification of Incidents.

a. Immediate Notification. Notwithstanding other requirements for notification, each licensee or registrant shall immediately report each event involving a source of radiation possessed by the licensee or registrant that may have caused or threatens to cause any of the following conditions:

i. An individual to receive:

(1) A total effective dose equivalent of 0.25 sievert (25 rem) or more; or

(2) A lense dose equivalent of 0.75 sievert (75 rem) or more; or

(3) A shallow dose equivalent to the skin or extremities or a total organ dose equivalent of 2.5 gray (250 rad) or more; or

ii. The release of radioactive material, inside or outside of a restricted area, so that, had an individual been present for 24 hours, the individual could have received an intake five times the occupational ALI. This provision does not apply to locations where personnel are not normally stationed during routine operations, such as hot-cells or process enclosures.

b. Twenty-Four Hour Notification. Each licensee or registrant shall, within 24 hours of discovery of the event, report to the Agency each event involving loss of control of a licensed or registered source of radiation possessed by the licensee or registrant that may have caused, or threatens to cause, any of the following conditions:

i. An individual to receive, in a period of 24 hours:

(1) A total effective dose equivalent exceeding 0.05 sievert (5 rem); or

(2) A lense dose equivalent exceeding 0.15 sievert (15 rem); or

(3) A shallow dose equivalent to the skin or extremities or a total organ dose equivalent exceeding 0.5 sievert (50 rem); or

ii. The release of radioactive material, inside or outside of a restricted area, so that, had an individual been present for 24 hours, the individual could have received an intake in excess of one occupational ALI. This provision does not apply to locations where personnel are not normally stationed during routine operations, such as hot-cells or process enclosures.

c. Licensees or registrants shall make the reports required by D.2202a. and b. by initial contact by telephone to the Agency and shall confirm the initial contact by telegram, mailgram, or facsimile to the Agency.

d. The licensee or registrant shall prepare each report filed with the Agency pursuant to D.2202 so that names of individuals who have received exposure to sources of radiation are stated in a separate and detachable portion of the report.

e. The provisions of D.2202 do not apply to doses that result from planned special exposures, provided such doses are within the limits for planned special exposures and are reported pursuant to D.2204.

Sec. D.2203 - Reports of Exposures, Radiation Levels, and Concentrations of Radioactive Material Exceeding the Limits.

a. Reportable Events. In addition to the notification required by D.2202, each licensee or registrant shall submit a written report within 30 days after learning of any of the following occurrences:

i. Incidents for which notification is required by D.2202; or

ii. Doses in excess of any of the following:

(1) The occupational dose limits for adults in D.1201; or

(2) The occupational dose limits for a minor in D.1207; or

(3) The limits for an embryo/fetus of a declared pregnant woman in D.1208; or

(4) The limits for an individual member of the public in D.1301; or

(5) Any applicable limit in the license or registration; or

(6) The ALARA constraints for air emissions established under D.1101d.

iii. Levels of radiation or concentrations of radioactive material in:

(1) A restricted area in excess of applicable limits in the license or registration; or

(2) An unrestricted area in excess of 10 times the applicable limit set forth in Part D or in the license or registration, whether or not involving exposure of any individual in excess of the limits in D.1301; or

iv. For licensees subject to the provisions of the Environmental Protection Agency's generally applicable environmental radiation standards in 40 CFR 190, levels of radiation or releases of radioactive material in excess of those standards, or of license conditions related to those standards.

b. Contents of Reports.

i. Each report required by D.2203a. shall describe the extent of exposure of individuals to radiation and radioactive material, including, as appropriate:

(1) Estimates of each individual's dose; and

(2) The levels of radiation and concentrations of radioactive material involved; and

(3) The cause of the elevated exposures, dose rates, or concentrations; and

(4) Corrective steps taken or planned to ensure against a recurrence, including the schedule for achieving conformance with applicable limits, ALARA constraints generally applicable environmental standards, and associated license or registration conditions.

ii. Each report filed pursuant to D.2203a. shall include for each occupationally overexposed[a/] individual: the name, Social Security account number, and date of birth. With respect to the limit for the embryo/fetus in D.1208, the identifiers should be those of the declared pregnant woman. The report shall be prepared so that this information is stated in a separate and detachable portion of the report.

c. All licensees or registrants who make reports pursuant to D.2203a. shall submit the report in writing to the Agency.

Sec. D.2204 - Reports of Planned Special Exposures. The licensee or registrant shall submit a written report to the Agency within 30 days following any planned special exposure conducted in accordance with D.1206, informing the Agency that a planned special exposure was conducted and indicating the date the planned special exposure occurred and the information required by Sec. D.2105.

Sec. D.2205 - Reports to Individuals of Exceeding Dose Limits. When a licensee or registrant is required, pursuant to D.2203, D.2204, or D.2206 to report to the Agency any exposure of an identified occupationally exposed individual, or an identified member of the public, to radiation or radioactive material, the licensee shall also provide a copy of the report submitted to the Agency to the individual. This report must be transmitted at a time no later than the transmittal to the Agency.

Sec. D.2206 - Reports of Individual Monitoring.

a. This section applies to each person licensed or registered by the Agency to:

i. Possess or use sources of radiation for purposes of industrial radiography pursuant to Parts C and E of these regulations; or

ii. Possess or use at any time, for processing or manufacturing for distribution pursuant to Part C or G of these regulations, radioactive material in quantities exceeding any one of the following quantities:

---

a/ *with respect to the limit for the embryo-fetus (D.2208), the identifiers should be those of the declared pregnant woman*

Radionuclide	Activity[a/]	
	Ci	GBq
Cesium-137	1	37
Cobalt-60	1	37
Gold-198	100	3,700
Iodine-131	1	37
Iridium-192	10	370
Krypton-85	1,000	37,000
Promethium-147	10	370
Technetium-99m	1,000	37,000

b. Each licensee or registrant in a category listed in D.2206a. shall submit an annual report of the results of individual monitoring carried out by the licensee or registrant for each individual for whom monitoring was required by D.1502 during that year. The licensee or registrant may include additional data for individuals for whom monitoring was provided but not required. The licensee or registrant shall use Agency Form Z or equivalent or electronic media containing all the information required by Agency Form Z.

c. The licensee or registrant shall file the report required by D.2206b., covering the preceding year, on or before April 30 of each year. The licensee or registrant shall submit the report to the Agency.

Sec D.2207 - Notifications and Reports to Individuals.

a. Requirements for notification and reports to individuals of exposure to radiation or radioactive material are specified in J.13 of these regulations.

b. When a licensee or registrant is required pursuant to D.2203 to report to the Agency any exposure of an individual to radiation or radioactive material, the licensee or registrant shall also notify the individual. Such notice shall be transmitted at a time not later than the transmittal to the Agency, and shall comply with the provisions of J.13a. of these regulations.

Sec. D.2208 - Reports of Leaking or Contaminated Sealed Sources. The licensee or registrant shall file a report within 5 working days with the Agency if the test for leakage or contamination [required pursuant to D.1310] indicates a sealed source is leaking or contaminated. The report shall include the equipment involved, the test results and the corrective action taken.

[a/] *The Agency may require as a license condition, or by rule, regulation, or order pursuant to A.7 of these regulations, reports from licensees or registrants who are licensed or registered to use radionuclides not on this list, in quantities sufficient to cause comparable radiation levels.*

Additional Requirements

Sec. D.2301 - Vacating Premises. Each specific licensee or registrant shall, no less than 30 days before vacating or relinquishing possession or control of premises which may have been contaminated with radioactive material as a result of his activities, notify the Agency in writing of intent to vacate. When deemed necessary by the Agency, the licensee shall decontaminate the premises in such a manner as the Agency may specify.

PART D

APPENDIX A

ASSIGNED PROTECTION FACTORS (APF) FOR RESPIRATORS[a]

	Operating Mode	Assigned Protection Factors
I. Air purifying respirators (Particulate[b] only)[c]		
Filtering faceplate disposable[d]	Negative Pressure	([d])
Facepiece, half[e]	Negative Pressure	10
Facepiece, full	Negative Pressure	100
Facepiece, half	Powered air-purifying respirators	50
Facepiece, full	Powered air-purifying respirators	1000
Helmet/hood	Powered air-purifying respirators	1000
Facepiece, loosefitting	Powered air-purifying respirators	25
II. Atmosphere supplying respirators (Particulate, gases, and vapors[f])		
1: Air-line respirator:		
Facepiece, half	Demand	10
Facepiece, half[e]	Continuous Flow	50
Facepiece, half	Pressure Demand	50
Facepiece, full	Demand	100
Facepiece, full	Continuous Flow	1000
Facepiece, full	Pressure Demand	1000
Helmet/hood	Continuous Flow	1000
Facepiece, loosefitting	Continuous Flow	25
Suit	Continuous Flow	([g])
2: Self-contained breathing apparatus (SCBA):		
Facepiece, full	Demand	[h]100
Facepiece, full	Pressure Demand	[i]10,000
Facepiece, full	Demand, recirculating	[h]100
Facepiece, full	Positive Pressure Recirculating	[i]10,000
III. Combination respirators: Any combination of air-purifying and atmosphere-supplying respirators	Assigned protection factor for type and mode of operations as listed above	

See the following pages for footnotes.

FOOTNOTES

a. These assigned protection factors apply only in respiratory protection program that meets the requirements of this Part. They are applicable only to airborne radiological hazards and may not be appropriate to circumstances when chemical or other respiratory hazards exist instead of, or in addition to, radioactive hazards. Selection and use of respirators for such circumstances must also comply with Department of Labor regulations. Radioactive contaminants for which the concentration values in Table 1, column 3 of Appendix B to Part D are based on internal dose due to inhalation may, in addition, present external exposure hazards at higher concentrations. Under these circumstances, limitations on occupancy may have to be governed by external dose limits.

b. Air purifying respirators with APF <100 must be equipped with particulate filters that are at least 95 percent efficient. Air purifying respirators with APF=100 must be equipped with particulate filters that are at least 99 percent efficient. Air purifying respirators with APF >100 must be equipped with particulate filters that area t least 99.97 percent efficient.

c. The licensee may apply to the Agency for the use of an APF greater than 1 for sorbent cartridges as protection against airborne radioactive gases and vapors (e.g., radioiodine).

d. Licensees may permit individuals to use this type of respirator who have not been medically screened or fit tested on the device provided that no credit be taken for their use in estimating intake or dose. It is also recognized that it is difficult to perform an effective positive or negative pressure pre-use user seal check on this type of device. All other respiratory protection program requirements listed in D.24 apply. An assigned protection factor has not been assigned for these devices. However, an APF equal to 10 may be used if the licensee can demonstrate a fit factor of at least 100 by use of a validated or evaluated, qualitative or quantitative fit test.

e. Under-chin type only. No distinction is made in this Appendix between elastomeric half-masks with replaceable cartridges and those designed with the filter medium as an integral part of the facepiece (e.g., disposable or reusable disposable). Both types are acceptable so long as the seal area of the latter contains some substantial type of seal enhancing material such as rubber or plastic, the two or more suspension straps are adjustable, the filter medium is at least 95 percent efficient and all other requirements of this Part are met.

f. The assigned protection factors for gases and vapors are not applicable to radioactive contaminants that present an absorption or submersion hazard. For tritium oxide vapor, approximately one-third of the intake occurs by absorption through the skin so that an overall protection factor of 3 is appropriate when atmosphere-supplying respirators are used to protect against tritium oxide. Exposure to radioactive noble gases is not considered a significant respiratory hazard, and protective actions for these contaminants should be based on external (submersion) dose considerations.

g. No NIOSH approval schedule is currently available for atmospheric supplying units. This

equipment may be used in an acceptable respiratory protection program as long as all the other minimum program requirements, with the exception of fit testing, are met (i.e., D.24).

h. The licensee should implement institutional controls to assure that these devices are not used in areas immediately dangerous to life or health (IDLH).

i. This type of respirator may be used as an emergency device in unknown concentrations for protection against inhalation hazards. External radiation hazards and other limitations to permitted exposure such as skin absorption shall be taken into account in these circumstances. This device may not be used by any individual who experiences perceptible outward leakage of breathing gas while wearing the device.

PART D

APPENDIX B

ANNUAL LIMITS ON INTAKE (ALI) AND DERIVED AIR CONCENTRATIONS (DAC) OF RADIONUCLIDES FOR OCCUPATIONAL EXPOSURE; EFFLUENT CONCENTRATIONS; CONCENTRATIONS FOR RELEASE TO SANITARY SEWERAGE

Introduction

For each radionuclide, Table I indicates the chemical form which is to be used for selecting the appropriate ALI or DAC value. The ALIs and DACs for inhalation are given for an aerosol with an activity median aerodynamic diameter (AMAD) of 1 μm (micron), and for three classes (D,W,Y) of radioactive material, which refer to their retention (approximately days, weeks or years) in the pulmonary region of the lung. This classification applies to a range of clearance half-times for D if less than 10 days, for W from 10 to 100 days, and for Y greater than 100 days. The class (D, W, or Y) given in the column headed "Class" applies only to the inhalation ALIs and DACs given in Table I, column 2 and 3. Table II provides concentration limits for airborne and liquid effluents released to the general environment. Table III provides concentration limits for discharges to sanitary sewerage.

Note: The values in Tables I, II, and III are presented in the computer "E" notation. In this notation a value of 6E-02 represents a value of 6×10^{-2} or 0.06, 6E+2 represents 6×10^{2} or 600, and 6E+0 represents 6×10^{0} or 6.

Table I "Occupational Values"

Note that the columns in Table I of this appendix captioned "Oral Ingestion ALI," "Inhalation ALI," and "DAC," are applicable to occupational exposure to radioactive material.

The ALIs in this appendix are the annual intakes of given radionuclide by "reference man" which would result in either (1) a committed effective dose equivalent of 0.05 sievert (5 rem), stochastic ALI, or (2) a committed dose equivalent of 0.5 sievert (50 rem) to an organ or tissue, non-stochastic ALI. The stochastic ALIs were derived to result in a risk, due to irradiation of organs and tissues, comparable to the risk associated with deep dose equivalent to the whole body of 0.05 sievert (5 rem). The derivation includes multiplying the committed dose equivalent to an organ or tissue by a weighting factor, w_T. This weighting factor is the proportion of the risk of stochastic effects resulting from irradiation of the organ or tissue, T, to the total risk of stochastic effects when the whole body is irradiated uniformly. The values of w_T are listed under the definition of weighting factor in D.3. The non-stochastic ALIs were derived to avoid non-stochastic effects, such as prompt damage to tissue or reduction in organ function.

A value of $w_T = 0.06$ is applicable to each of the 5 organs or tissues in the "remainder" category receiving the highest dose equivalents, and the dose equivalents of all other remaining tissues may be disregarded. The following portions of the GI tract – stomach, small intestine, upper large intestine, and lower large intestine – are to be treated as 4 separate organs.

Note that the dose equivalents for an extremity, skin and lens of the eye are not considered in computing the committed effective dose equivalent, but are subject to limits that must be met separately.

When an ALI is defined by the stochastic dose limit, this value alone is given. When an ALI is determined by the non-stochastic dose limit to an organ, the organ or tissue to which the limit applies is shown, and the ALI for the stochastic limit is shown in parentheses. Abbreviated organ or tissue designations are used:

LLI wall = lower large intestine wall;
St wall = stomach wall;
Blad wall = bladder wall; and
Bone surf = bone surface.

The use of the ALIs listed first, the more limiting of the stochastic and non-stochastic ALIs, will ensure that non-stochastic effects are avoided and that the risk of stochastic effects is limited to an acceptably low value. If, in a particular situation involving a radionuclide for which the non-stochastic ALI is limiting, use of that non-stochastic ALI is considered unduly conservative, the licensee may use the stochastic ALI to determine the committed effective dose equivalent. However, the licensee shall also ensure that the 0.5 sievert (50 rem) dose equivalent limit for any organ or tissue is not exceeded by the sum of the external deep dose equivalent plus the internal committed dose equivalent to that organ, not the effective dose. For the case where there is no external dose contribution, this would be demonstrated if the sum of the fractions of the nonstochastic ALIs (ALI_{ns}) that contribute to the committed dose equivalent to the organ receiving the highest dose does not exceed unity, that is, ? (intake (in μCi) of each radionuclide/ALI_{ns}) <1.0. If there is an external deep dose equivalent contribution of H_d, then this sum must be less than 1 - (H_d/50), instead of < 1.0.

Note that the dose equivalents for an extremity, skin, and lens of the eye are not considered in computing the committed effective dose equivalent, but are subject to limits that must be met separately.

The derived air concentration (DAC) values are derived limits intended to control chronic occupational exposures. The relationship between the DAC and the ALI is given by:

$$\text{DAC} = \text{ALI(in } \mu\text{Ci)/(2000 hours per working year x 60 minutes/hour x } 2 \times 10^4 \text{ ml per minute)} = [\text{ALI}/2.4 \times 10^9]\ \mu\text{Ci/ml},$$

where 2×10^4 ml is the volume of air breathed per minute at work by reference man under working conditions of light work.

The DAC values relate to 1 of 2 modes of exposure: either external submersion or the internal committed dose equivalents resulting from inhalation of radioactive materials. DACs based upon submersion are for immersion in a semi-infinite cloud of uniform concentration and apply to each radionuclide separately.

The ALI and DAC values include contributions to exposure by the single radionuclide named and any in-growth of daughter radionuclides produced in the body by decay of the parent. However, intakes that include both the parent and daughter radionuclides should be treated by the general method appropriate for mixtures.

The values of ALI and DAC do not apply directly when the individual both ingests and inhales a radionuclide, when the individual is exposed to a mixture of radionuclides by either inhalation or ingestion or both, or when the individual is exposed to both internal and external irradiation. See D.1202. When an individual is exposed to radioactive materials which fall under several of the translocation classifications of the same radionuclide, such as, Class D, Class W, or Class Y, the exposure may be evaluated as if it were a mixture of different radionuclides.

It should be noted that the classification of a compound as Class D, W, or Y is based on the chemical form of the compound and does not take into account the radiological half-life of different radionuclides. For this reason, values are given for Class D, W, and Y compounds, even for very short-lived radionuclides.

Table II "Effluent Concentrations"

The columns in Table II of this appendix captioned "Effluents," "Air" and "Water" are applicable to the assessment and control of dose to the public, particularly in the implementation of the provisions of D.1302. The concentration values given in Columns 1 and 2 of Table II are equivalent to the radionuclide concentrations which, if inhaled or ingested continuously over the course of a year, would produce a total effective dose equivalent of 0.5 millisievert (0.05 rem).

Consideration of non-stochastic limits has not been included in deriving the air and water effluent concentration limits because non-stochastic effects are presumed not to occur at or below the dose levels established for individual members of the public. For radionuclides, where the non-stochastic limit was governing in deriving the occupational DAC, the stochastic ALI was used in deriving the corresponding airborne effluent limit in Table II. For this reason, the DAC and airborne effluent limits are not always proportional as was the case in Appendix A of Part D of the eighth edition of Volume I of the *Suggested State Regulations for Control of Radiation*.

The air concentration values listed in Table II, Column 1 were derived by one of two methods. For those radionuclides for which the stochastic limit is governing, the occupational stochastic inhalation ALI was divided by 2.4×10^9 (ml), relating the inhalation ALI to the DAC, as explained above, and then divided by a factor of 300. The factor of 300 includes the following components: a factor of 50 to relate the 0.05 sievert (5 rem) annual occupational dose limit to the 1 millisievert (0.1 rem) limit for members of the public, a factor of 3 to adjust for the difference in exposure time and the inhalation rate for a worker and that for members of the public; and a factor of 2 to adjust the occupational values, derived for adults, so that they are applicable to other age groups.

For those radionuclides for which submersion, that is external dose, is limiting, the occupational DAC in Table I, Column 3 was divided by 219. The factor of 219 is composed of a factor of 50, as described above, and a factor of 4.38 relating occupational exposure for 2,000 hours per year to full-time exposure (8,760 hours per year). Note that an additional factor of 2 for age considerations is not warranted in the submersion case.

The water concentrations were derived by taking the most restrictive occupational stochastic oral ingestion ALI and dividing by 7.3×10^7. The factor of 7.3×10^7 ml includes the following components: the factors of 50 and 2 described above and a factor of 7.3×10^5 ml which is the annual water intake of reference man.

Note 2 of this appendix provides groupings of radionuclides which are applicable to unknown mixtures of radionuclides. These groupings, including occupational inhalation ALIs and DACs, air and water effluent concentrations and releases to sewer, require demonstrating that the most limiting radionuclides in successive classes are absent. The limit for the unknown mixture is defined when the presence of one of the listed radionuclides cannot be definitely excluded as being present either from knowledge of the radionuclide composition of the source or from actual measurements.

Table III "Releases to Sewers"

The monthly average concentrations for release to sanitary sewerage are applicable to the provisions in D.2003. The concentration values were derived by taking the most restrictive occupational stochastic oral ingestion ALI and dividing by 7.3×10^6 ml. The factor of 7.3×10^6 ml is composed of a factor of 7.3×10^5 ml, the annual water intake by reference man, and a factor of 10, such that the concentrations, if the sewage released by the licensee were the only source of water ingested by a reference man during a year, would result in a committed effective dose equivalent of 5 millisievert (0.5 rem).

List of Elements

Name	Symbol	Atomic Number	Name	Symbol	Atomic Number
Actinium	Ac	89	Chromium	Cr	24
Aluminum	Al	13	Cobalt	Co	27
Americium	Am	95	Copper	Cu	29
Antimony	Sb	51	Curium	Cm	96
Argon	Ar	18	Dysprosium	Dy	66
Arsenic	As	33	Einsteinium	Es	99
Astatine	At	85	Erbium	Er	68
Barium	Ba	56	Europium	Eu	63
Berkelium	Bk	97	Fermium	Fm	100
Beryllium	Be	4	Fluorine	F	9
Bismuth	Bi	83	Francium	Fr	87
Bromine	Br	35	Gadolinium	Gd	64
Cadmium	Cd	48	Gallium	Ga	31
Calcium	Ca	20	Germanium	Ge	32
Californium	Cf	98	Gold	Au	79
Carbon	C	6	Hafnium	Hf	72
Cerium	Ce	58	Holmium	Ho	67
Cesium	Cs	55	Hydrogen	H	1
Chlorine	Cl	17	Indium	In	49

List of Elements *(Continued)*

Name	Symbol	Atomic Number	Name	Symbol	Atomic Number
Iodine	I	53	Technetium	Tc	43
Iridium	Ir	77	Tellurium	Te	52
Iron	Fe	26	Terbium	Tb	65
Krypton	Kr	36	Thallium	Tl	81
Lanthanum	La	57	Thorium	Th	90
Lead	Pb	82	Thulium	Tm	69
Lutetium	Lu	71	Tin	Sn	50
Magnesium	Mg	12	Titanium	Ti	22
Manganese	Mn	25	Tungsten	W	74
Mendelevium	Md	101	Uranium	U	92
Mercury	Hg	80	Vanadium	V	23
Molybdenum	Mo	42	Xenon	Xe	54
Neodymium	Nd	60	Ytterbium	Yb	70
Neptunium	Np	93	Yttrium	Y	39
Nickel	Ni	28	Zinc	Zn	30
Niobium	Nb	41	Zirconium	Zr	40
Osmium	Os	76			
Palladium	Pd	46			
Phosphorus	P	15			
Platinum	Pt	78			
Plutonium	Pu	94			
Polonium	Po	84			
Potassium	K	19			
Praseodymium	Pr	59			
Promethium	Pm	61			
Protactinium	Pa	91			
Radium	Ra	88			
Radon	Rn	86			
Rhenium	Re	75			
Rhodium	Rh	45			
Rubidium	Rb	37			
Ruthenium	Ru	44			
Samarium	Sm	62			
Scandium	Sc	21			
Selenium	Se	34			
Silicon	Si	14			
Silver	Ag	47			
Sodium	Na	11			
Strontium	Sr	38			
Sulfur	S	16			
Tantalum	Ta	73			

Annual Limits on Intake (ALI) and Derived Air Concentrations (DAC) of Radionuclides for Occupational Exposure
Effluent Concentrations
Concentrations for Release to Sanitary Sewerage

			Table I Occupational Values			Table II Effluent Concentrations		Table III Releases to Sewers
			Col. 1	Col. 2	Col. 3	Col. 1	Col. 2	
			Oral Ingestion	Inhalation				
Atomic No.	Radionuclide	Class	ALI (μCi)	ALI (μCi)	DAC (μCi/ml)	Air (μCi/ml)	Water (μCi/ml)	Monthly Average Concentration (μCi/ml)
1	Hydrogen-3	Water, DAC includes skin absorption	8E+4	8E+4	2E-5	1E-7	1E-3	1E-2
		Gas (HT or T_2) Submersion[a/]: Use above values as HT and T_2 oxidize in air and in the body to HTO.						
4	Beryllium-7	W, all compounds except those given for Y	4E+4	2E+4	9E-6	3E-8	6E-4	6E-3
		Y, oxides, halides, and nitrates	-	2E+4	8E-6	3E-8	-	-
4	Beryllium-10	W, see ^{7}Be	1E+3	2E+2	6E-8	2E-10	-	-
			LLI wall (1E+3)	-	-	-	2E-5	2E-4
		Y, see ^{7}Be	-	1E+1	6E-9	2E-11	-	-
6	Carbon-11[b/]	Monoxide	-	1E+6	5E-4	2E-6	-	-
		Dioxide	-	6E+5	3E-4	9E-7	-	-
		Compounds	4E+5	4E+5	2E-4	6E-7	6E-3	6E-2
6	Carbon-14	Monoxide	-	2E+6	7E-4	2E-6	-	-
		Dioxide	-	2E+5	9E-5	3E-7	-	-
		Compounds	2E+3	2E+3	1E-6	3E-9	3E-5	3E-4
9	Fluorine-18[b/]	D, fluorides of H, Li, Na, K, Rb, Cs, and Fr	5E+4	7E+4	3E-5	1E-7	-	-
			St wall (5E+4)	-	-	-	7E-4	7E-3
		W, fluorides of Be, Mg, Ca, Sr, Ba, Ra, Al, Ga, In, Tl, As, Sb, Bi, Fe, Ru, Os, Co, Ni, Pd, Pt, Cu, Ag, Au, Zn, Cd, Hg, Sc, Y, Ti, Zr, V, Nb, Ta, Mn, Tc, and Re	-	9E+4	4E-5	1E-7	-	-
		Y, lanthanum fluoride	-	8E+4	3E-5	1E-7	-	-
11	Sodium-22	D, all compounds	4E+2	6E+2	3E-7	9E-10	6E-6	6E-5
11	Sodium-24	D, all compounds	4E+3	5E+3	2E-6	7E-9	5E-5	5E-4
12	Magnesium-28	D, all compounds except those given for W	7E+2	2E+3	7E-7	2E-9	9E-6	9E-5
		W, oxides, hydroxides, carbides, halides, and nitrates	-	1E+3	5E-7	2E-9	-	-

Footnotes appear at the end of these three tables.

Annual Limits on Intake (ALI) and Derived Air Concentrations (DAC) of Radionuclides for Occupational Exposure
Effluent Concentrations
Concentrations for Release to Sanitary Sewerage (*Continued)*

			Table I Occupational Values			Table II Effluent Concentrations		Table III Releases to Sewers
			Col. 1	Col. 2	Col. 3	Col. 1	Col. 2	
			Oral Ingestion	Inhalation				Monthly Average
Atomic No.	Radionuclide	Class	ALI (μCi)	ALI (μCi)	DAC (μCi/ml)	Air (μCi/ml)	Water (μCi/ml)	Concentration (μCi/ml)
13	Aluminum-26	D, all compounds except those given for W	4E+2	6E+1	3E-8	9E-11	6E-6	6E-5
		W, oxides, hydroxides, carbides, halides, and nitrates	-	9E+1	4E-8	1E-10	-	-
14	Silicon-31	D, all compounds except those given for W and Y	9E+3	3E+4	1E-5	4E-8	1E-4	1E-3
		W, oxides, hydroxides, carbides, and nitrates	-	3E+4	1E-5	5E-8	-	-
		Y, aluminosilicate glass	-	3E+4	1E-5	4E-8	-	-
14	Silicon-32	D, see ^{31}Si	2E+3	2E+2	1E-7	3E-10	-	-
			LLI wall (3E+3)	-	-	-	4E-5	4E-4
		W, see ^{31}Si	-	1E+2	5E-8	2E-10	-	-
		Y, see ^{31}Si	-	5E+0	2E-9	7E-12	-	-
15	Phosphorus-32	D, all compounds except phosphates given for W	6E+2	9E+2	4E-7	1E-9	9E-6	9E-5
		W, phosphates of Zn^{2+}, S^{3+}, Mg^{2+}, Fe^{3+}, Bi^{3+}, and lanthanides	-	4E+2	2E-7	5E-10	-	-
15	Phosphorus-33	D, see ^{32}P	6E+3	8E+3	4E-6	1E-8	8E-5	8E-4
		W, see ^{32}P	-	3E+3	1E-6	4E-9	-	-
16	Sulfur-35	Vapor	-	1E+4	6E-6	2E-8	-	-
		D, sulfides and sulfates except those given for W	1E+4	2E+4	7E-6	2E-8	-	-
			LLI wall (8E+3)	-	-	-	1E-4	1E-3
		W, elemental sulfur, sulfides of Sr, Ba, Ge, Sn, Pb, As, Sb, Bi, Cu, Ag, Au, Zn, Cd, Hg, W, and Mo. Sulfates of Ca, Sr, Ba, Ra, As, Sb, and Bi	6E+3 -	2E+3	9E-7	3E-9	-	-
17	Chlorine-36	D, chlorides of H, Li, Na, K, Rb, Cs, and Fr	2E+3	2E+3	1E-6	3E-9	2E-5	2E-4
		W, chlorides of lanthanides, Be, Mg, Ca, Sr, Ba, Ra, Al, Ga, In, Tl, Ge, Sn, Pb, As, Sb, Bi, Fe, Ru, Os, Co, Rh, Ir, Ni, Pd, Pt, Cu, Ag, Au, Zn, Cd, Hg, Sc, Y, Ti, Zr, Hf, V, Nb, Ta, Cr, Mo, W, Mn, Tc, and Re	-	2E+2	1E-7	3E-10	-	-

Footnotes appear at the end of these three tables.

Annual Limits on Intake (ALI) and Derived Air Concentrations (DAC) of Radionuclides for Occupational Exposure
Effluent Concentrations
Concentrations for Release to Sanitary Sewerage (*Continued)*

			Table I Occupational Values			Table II Effluent Concentrations		Table III Releases to Sewers
			Col. 1	Col. 2	Col. 3	Col. 1	Col. 2	
			Oral Ingestion	Inhalation				
Atomic No.	Radionuclide	Class	ALI (μCi)	ALI (μCi)	DAC (μCi/ml)	Air (μCi/ml)	Water (μCi/ml)	Monthly Average Concentration (μCi/ml)
17	Chlorine-38[b/]	D, see ^{36}Cl	2E+4	4E+4	2E-5	6E-8	-	-
			St wall (3E+4)	-	-	-	3E-4	3E-3
		W, see ^{36}Cl	-	5E+4	2E-5	6E-8	-	-
17	Chlorine-39[b/]	D, see ^{36}Cl	2E+4	5E+4	2E-5	7E-8	-	-
			St wall (4E+4)	-	-	-	5E-4	5E-3
		W, see ^{36}Cl	-	6E+4	2E-5	8E-8	-	-
18	Argon-37	Submersion[a/]	-	-	1E+0	6E-3	-	-
18	Argon-39	Submersion[a/]	-	-	2E-4	8E-7	-	-
18	Argon-41	Submersion[a/]	-	-	3E-6	1E-8	-	-
19	Potassium-40	D, all compounds	3E+2	4E+2	2E-7	6E-10	4E-6	4E-5
19	Potassium-42	D, all compounds	5E+3	5E+3	2E-6	7E-9	6E-5	6E-4
19	Potassium-43	D, all compounds	6E+3	9E+3	4E-6	1E-8	9E-5	9E-4
19	Potassium-44[b/]	D, all compounds	2E+4	7E+4	3E-5	9E-8	-	-
			St wall (4E+4)	-	-	-	5E-4	5E-3
19	Potassium-45[b/]	D, all compounds	3E+4	1E+5	5E-5	2E-7	-	-
			St wall (5E+4)	-	-	-	7E-4	7E-3
20	Calcium-41	W, all compounds	3E+3	4E+3	2E-6	-	-	-
			Bone surf (4E+3)	Bone surf (4E+3)	-	5E-9	6E-5	6E-4
20	Calcium-45	W, all compounds	2E+3	8E+2	4E-7	1E-9	2E-5	2E-4
20	Calcium-47	W, all compounds	8E+2	9E+2	4E-7	1E-9	1E-5	1E-4
21	Scandium-43	Y, all compounds	7E+3	2E+4	9E-6	3E-8	1E-4	1E-3
21	Scandium-44m	Y, all compounds	5E+2	7E+2	3E-7	1E-9	7E-6	7E-5
21	Scandium-44	Y, all compounds	4E+3	1E+4	5E-6	2E-8	5E-5	5E-4
21	Scandium-46	Y, all compounds	9E+2	2E+2	1E-7	3E-10	1E-5	1E-4
21	Scandium-47	Y, all compounds	2E+3	3E+3	1E-6	4E-9	-	-
			LLI wall (3E+3)	-	-	-	4E-5	4E-4
21	Scandium-48	Y, all compounds	8E+2	1E+3	6E-7	2E-9	1E-5	1E-4

Footnotes appear at the end of these three tables.

Annual Limits on Intake (ALI) and Derived Air Concentrations (DAC) of Radionuclides for Occupational Exposure
Effluent Concentrations
Concentrations for Release to Sanitary Sewerage (*Continued)*

			Table I Occupational Values			Table II Effluent Concentrations		Table III Releases to Sewers
			Col. 1	Col. 2	Col. 3	Col. 1	Col. 2	
			Oral Ingestion	Inhalation				
Atomic No.	Radionuclide	Class	ALI (μCi)	ALI (μCi)	DAC (μCi/ml)	Air (μCi/ml)	Water (μCi/ml)	Monthly Average Concentration (μCi/ml)
21	Scandium-49[b/]	Y, all compounds	2E+4	5E+4	2E-5	8E-8	3E-4	3E-3
22	Titanium-44	D, all compounds except those given for W and Y	3E+2	1E+1	5E-9	2E-11	4E-6	4E-5
		W, oxides, hydroxides, carbides, halides, and nitrates	-	3E+1	1E-8	4E-11	-	-
		Y, SrTi0	-	6E+0	2E-9	8E-12	-	-
22	Titanium-45	D, see ^{44}Ti	9E+3	3E+4	1E-5	3E-8	1E-4	1E-3
		W, see ^{44}Ti	-	4E+4	1E-5	5E-8	-	-
		Y, see ^{44}Ti	-	3E+4	1E-5	4E-8	-	-
23	Vanadium-47[b/]	D, all compounds except those given for W	3E+4	8E+4	3E-5	1E-7	-	-
			St wall (3E+4)	-	-	-	4E-4	4E-3
		W, oxides, hydroxides, carbides, and halides	-	1E+5	4E-5	1E-7	-	-
23	Vanadium-48	D, see ^{47}V	6E+2	1E+3	5E-7	2E-9	9E-6	9E-5
		W, see ^{47}V	-	6E+2	3E-7	9E-10	-	-
23	Vanadium-49	D, see ^{47}V	7E+4	3E+4	1E-5	-	-	-
			LLI wall (9E+4)	Bone surf (3E+4)	-	5E-8	1E-3	1E-2
		W, see ^{47}V	-	2E+4	8E-6	2E-8	-	-
24	Chromium-48	D, all compounds except those given for W and Y	6E+3	1E+4	5E-6	2E-8	8E-5	8E-4
		W, halides and nitrates	-	7E+3	3E-6	1E-8	-	-
		Y, oxides and hydroxides	-	7E+3	3E-6	1E-8	-	-
24	Chromium-49[b/]	D, see ^{48}Cr	3E+4	8E+4	4E-5	1E-7	4E-4	4E-3
		W, see ^{48}Cr	-	1E+5	4E-5	1E-7	-	-
		Y, see ^{48}Cr	-	9E+4	4E-5	1E-7	-	-
24	Chromium-51	D, see ^{48}Cr	4E+4	5E+4	2E-5	6E-8	5E-4	5E-3
		W, see ^{48}Cr	-	2E+4	1E-5	3E-8	-	-
		Y, see ^{48}Cr	-	2E+4	8E-6	3E-8	-	-
25	Manganese-51[b/]	D, all compounds except those given for W	2E+4	5E+4	2E-5	7E-8	3E-4	3E-3
		W, oxides, hydroxides, halides, and nitrates	-	6E+4	3E-5	8E-8	-	-
25	Manganese-52m[b/]	D, see ^{51}Mn	3E+4	9E+4	4E-5	1E-7	-	-
			St wall (4E+4)	-	-	-	5E-4	5E-3
		W, see ^{51}Mn	-	1E+5	4E-5	1E-7	-	-

Footnotes appear at the end of these three tables.

Annual Limits on Intake (ALI) and Derived Air Concentrations (DAC) of Radionuclides for Occupational Exposure
Effluent Concentrations
Concentrations for Release to Sanitary Sewerage (*Continued)*

			Table I Occupational Values			Table II Effluent Concentrations		Table III Releases to Sewers
			Col. 1 Oral Ingestion	Col. 2 Inhalation	Col. 3 Inhalation	Col. 1	Col. 2	
Atomic No.	Radionuclide	Class	ALI (μCi)	ALI (μCi)	DAC (μCi/ml)	Air (μCi/ml)	Water (μCi/ml)	Monthly Average Concentration (μCi/ml)
25	Manganese-52	D, see ^{51}Mn	7E+2	1E+3	5E-7	2E-9	1E-5	1E-4
		W, see ^{51}Mn	-	9E+2	4E-7	1E-9	-	-
25	Manganese-53	D, see ^{51}Mn	5E+4	1E+4	5E-6	-	7E-4	7E-3
			-	Bone surf (2E+4)	-	3E-8	-	-
		W, see ^{51}Mn	-	1E+4	5E-6	2E-8	-	-
25	Manganese-54	D, see ^{51}Mn	2E+3	9E+2	4E-7	1E-9	3E-5	3E-4
		W, see ^{51}Mn	-	8E+2	3E-7	1E-9	-	-
25	Manganese-56	D, see ^{51}Mn	5E+3	2E+4	6E-6	2E-8	7E-5	7E-4
		W, see ^{51}Mn	-	2E+4	9E-6	3E-8	-	-
26	Iron-52	D, all compounds except those given for W	9E+2	3E+3	1E-6	4E-9	1E-5	1E-4
		W, oxides, hydroxides, and halides	-	2E+3	1E-6	3E-9	-	-
26	Iron-55	D, see ^{52}Fe	9E+3	2E+3	8E-7	3E-9	1E-4	1E-3
		W, see ^{52}Fe	-	4E+3	2E-6	6E-9	-	-
26	Iron-59	D, see ^{52}Fe	8E+2	3E+2	1E-7	5E-10	1E-5	1E-4
		W, see ^{52}Fe	-	2E-7	7E-10	-	-	-
26	Iron-60	D, see ^{52}Fe	3E+1	6E+0	3E-9	9E-12	4E-7	4E-6
		W, see ^{52}Fe	-1	8E-9	3E-11	-	-	-
27	Cobalt-55	W, all compounds except those given for Y	1E+3	3E+3	1E-6	4E-9	2E-5	2E-4
		Y, oxides, hydroxides, halides, and nitrates	-	E+3	1E-6	4E-9	-	-
27	Cobalt-56	W, see ^{55}Co	5E+2	3E+2	1E-7	4E-10	6E-6	6E-5
		Y, see ^{55}Co	4E+2	2E+2	8E-8	3E-10	-	-
27	Cobalt-57	W, see ^{55}Co	8E+3	3E+3	1E-6	4E-9	6E-5	6E-4
		Y, see ^{55}Co	4E+3	7E+2	3E-7	9E-10	-	-
27	Cobalt-58m	W, see ^{55}Co	6E+4	9E+4	4E-5	1E-7	8E-4	8E-3
		Y, see ^{55}Co	-	6E+4	3E-5	9E-8	-	-
27	Cobalt-58	W, see ^{55}Co	2E+3	1E+3	5E-7	2E-9	2E-5	2E-4
		Y, see ^{55}Co	1E+3	7E+2	3E-7	1E-9	-	-
27	Cobalt-60m[b/]	W, see ^{55}Co	1E+6	4E+6	2E-3	6E-6	-	-
			St wall (1E+6)	-	-	-	2E-2	2E-1
		Y, see ^{55}Co	-	3E+6	1E-3	4E-6	-	-

Footnotes appear at the end of these three tables.

Annual Limits on Intake (ALI) and Derived Air Concentrations (DAC) of Radionuclides for Occupational Exposure
Effluent Concentrations
Concentrations for Release to Sanitary Sewerage (*Continued)*

			Table I Occupational Values			Table II Effluent Concentrations		Table III Releases to Sewers
			Col. 1	Col. 2	Col. 3	Col. 1	Col. 2	
			Oral Ingestion	Inhalation				
Atomic No.	Radionuclide	Class	ALI (μCi)	ALI (μCi)	DAC (μCi/ml)	Air (μCi/ml)	Water (μCi/ml)	Monthly Average Concentration (μCi/ml)
27	Cobalt-60	W, see ^{55}Co	5E+2	2E+2	7E-8	2E-10	3E-6	3E-5
		Y, see ^{55}Co	2E+2	3E+1	1E-8	5E-11	-	-
27	Cobalt-61[b/]	W, see ^{55}Co	2E+4	6E+4	3E-5	9E-8	3E-4	3E-3
		Y, see ^{55}Co	2E+4	6E+4	2E-5	8E-8	-	-
27	Cobalt-62m[b/]	W, see ^{55}Co	4E+4	2E+5	7E-5	2E-7	-	-
			St wall (5E+4)	-	-	-	7E-4	7E-3
		Y, see ^{55}Co	-	2E+5	6E-5	2E-7	-	-
28	Nickel-56	D, all compounds except those given for W	1E+3	2E+3	8E-7	3E-9	2E-5	2E-4
		W, oxides, hydroxides, and carbides	-	1E+3	5E-7	2E-9	-	-
		Vapor	-	1E+3	5E-7	2E-9	-	-
28	Nickel-57	D, see ^{56}Ni	2E+3	5E+3	2E-6	7E-9	2E-5	2E-4
		W, see ^{56}Ni	-	3E+3	1E-6	4E-9	-	-
		Vapor	-	6E+3	3E-6	9E-9	-	-
28	Nickel-59	D, see ^{56}Ni	2E+4	4E+3	2E-6	5E-9	3E-4	3E-3
		W, see ^{56}Ni	-	7E+3	3E-6	1E-8	-	-
		Vapor	-	2E+3	8E-7	3E-9	-	-
28	Nickel-63	D, see ^{56}Ni	9E+3	2E+3	7E-7	2E-9	1E-4	1E-3
		W, see ^{56}Ni	-	3E+3	1E-6	4E-9	-	-
		Vapor	-	8E+2	3E-7	1E-9	-	-
28	Nickel-65	D, see ^{56}Ni	8E+3	2E+4	1E-5	3E-8	1E-4	1E-3
		W, see ^{56}Ni	-	3E+4	1E-5	4E-8	-	-
		Vapor	-	2E+4	7E-6	2E-8	-	-
28	Nickel-66	D, see ^{56}Ni	4E+2	2E+3	7E-7	2E-9	-	-
			LLI wall (5E+2)	-	-	-	6E-6	6E-5
		W, see ^{56}Ni	-	6E+2	3E-7	9E-10	-	-
		Vapor	-	3E+3	1E-6	4E-9	-	-
29	Copper-60[b/]	D, all compounds except those given for W and Y	3E+4	9E+4	4E-5	1E-7	-	-
			St wall (3E+4)	-	-	-	4E-4	4E-3
		W, sulfides, halides, and nitrates	-	1E+5	5E-5	2E-7	-	-
		Y, oxides and hydroxides	-	1E+5	4E-5	1E-7	-	-
29	Copper-61	D, see ^{60}Cu	1E+4	3E+4	1E-5	4E-8	2E-4	2E-3
		W, see ^{60}Cu	-	4E+4	2E-5	6E-8	-	-
		Y, see ^{60}Cu	-	4E+4	1E-5	5E-8	-	-

Footnotes appear at the end of these three tables.

Annual Limits on Intake (ALI) and Derived Air Concentrations (DAC) of Radionuclides for Occupational Exposure
Effluent Concentrations
Concentrations for Release to Sanitary Sewerage (*Continued)*

			Table I Occupational Values			Table II Effluent Concentrations		Table III Releases to Sewers
			Col. 1	Col. 2	Col. 3	Col. 1	Col. 2	
			Oral Ingestion	Inhalation				
Atomic No.	Radionuclide	Class	ALI (μCi)	ALI (μCi)	DAC (μCi/ml)	Air (μCi/ml)	Water (μCi/ml)	Monthly Average Concentration (μCi/ml)
29	Copper-64	D, see ^{60}Cu	1E+4	3E+4	1E-5	4E-8	2E-4	2E-3
		W, see ^{60}Cu	-	2E+4	1E-5	3E-8	-	-
		Y, see ^{60}Cu	-	2E+4	9E-6	3E-8	-	-
29	Copper-67	D, see ^{60}Cu	5E+3	8E+3	3E-6	1E-8	6E-5	6E-4
		W, see ^{60}Cu	-	5E+3	2E-6	7E-9	-	-
		Y, see ^{60}Cu	-	5E+3	2E-6	6E-9	-	-
30	Zinc-62	Y, all compounds	1E+3	3E+3	1E-6	4E-9	2E-5	2E-4
30	Zinc-63[b/]	Y, all compounds	2E+4	7E+4	3E-5	9E-8	-	-
			St wall (3E+4)	-	-	-	3E-4	3E-3
30	Zinc-65	Y, all compounds	4E+2	3E+2	1E-7	4E-10	5E-6	5E-5
30	Zinc-69m	Y, all compounds	4E+3	7E+3	3E-6	1E-8	6E-5	6E-4
30	Zinc-69[b/]	Y, all compounds	6E+4	1E+5	6E-5	2E-7	8E-4	8E-3
30	Zinc-71m	Y, all compounds	6E+3	2E+4	7E-6	2E-8	8E-5	8E-4
30	Zinc-72	Y, all compounds	1E+3	1E+3	5E-7	2E-9	1E-5	1E-4
31	Gallium-65[b/]	D, all compounds except those given for W	5E+4	2E+5	7E-5	2E-7	-	-
			St wall (6E+4)	-	-	-	9E-4	9E-3
		W, oxides, hydroxides, carbides, halides, and nitrates	-	2E+5	8E-5	3E-7	-	-
31	Gallium-66	D, see ^{65}Ga	1E+3	4E+3	1E-6	5E-9	1E-5	1E-4
		W, see ^{65}Ga	-	3E+3	1E-6	4E-9	-	-
31	Gallium-67	D, see ^{65}Ga	7E+3	1E+4	6E-6	2E-8	1E-4	1E-3
		W, see ^{65}Ga	-	1E+4	4E-6	1E-8	-	-
31	Gallium-68[b/]	D, see ^{65}Ga	2E+4	4E+4	2E-5	6E-8	2E-4	2E-3
		W, see ^{65}Ga	-	5E+4	2E-5	7E-8	-	-
31	Gallium-70[b/]	D, see ^{65}Ga	5E+4	2E+5	7E-5	2E-7	-	-
			St wall (7E+4)	-	-	-	1E-3	1E-2
		W, see ^{65}Ga	-	2E+5	8E-5	3E-7	-	-
31	Gallium-72	D, see ^{65}Ga	1E+3	4E+3	1E-6	5E-9	2E-5	2E-4
		W, see ^{65}Ga	-	3E+3	1E-6	4E-9	-	-
31	Gallium-73	D, see ^{65}Ga	5E+3	2E+4	6E-6	2E-8	7E-5	7E-4
		W, see ^{65}Ga	-	2E+4	6E-6	2E-8	-	-

Footnotes appear at the end of these three tables.

Annual Limits on Intake (ALI) and Derived Air Concentrations (DAC) of Radionuclides for Occupational Exposure
Effluent Concentrations
Concentrations for Release to Sanitary Sewerage (*Continued)*

			Table I Occupational Values			Table II Effluent Concentrations		Table III Releases to Sewers
			Col. 1	Col. 2	Col. 3	Col. 1	Col. 2	
			Oral Ingestion	Inhalation				
Atomic No.	Radionuclide	Class	ALI (μCi)	ALI (μCi)	DAC (μCi/ml)	Air (μCi/ml)	Water (μCi/ml)	Monthly Average Concentration (μCi/ml)
32	Germanium-66	D, all compounds except those given for W	2E+4	3E+4	1E-5	4E-8	3E-4	3E-3
		W, oxides, sulfides, and halides	-	2E+4	8E-6	3E-8	-	-
32	Germanium-67[b/]	D, see ^{66}Ge	3E+4	9E+4	4E-5	1E-7	-	-
			St wall (4E+4)	-	-	-	6E-4	6E-3
		W, see ^{66}Ge	-	1E+5	4E-5	1E-7	-	-
32	Germanium-68	D, see ^{66}Ge	5E+3	4E+3	2E-6	5E-9	6E-5	6E-4
		W, see ^{66}Ge	-	1E+2	4E-8	1E-10	-	-
32	Germanium-69	D, see ^{66}Ge	1E+4	2E+4	6E-6	2E-8	2E-4	2E-3
		W, see ^{66}Ge	-	8E+3	3E-6	1E-8	-	-
32	Germanium-71	D, see ^{66}Ge	5E+5	4E+5	2E-4	6E-7	7E-3	7E-2
		W, see ^{66}Ge	-	4E+4	2E-5	6E-8	-	-
32	Germanium-75[b/]	D, see ^{66}Ge	4E+4	8E+4	3E-5	1E-7	-	-
			St wall (7E+4)	-	-	-	9E-4	9E-3
		W, see ^{66}Ge	-	8E+4	4E-5	1E-7	-	-
32	Germanium-77	D, see ^{66}Ge	9E+3	1E+4	4E-6	1E-8	1E-4	1E-3
		W, see ^{66}Ge	-	6E+3	2E-6	8E-9	-	-
32	Germanium-78[b/]	D, see ^{66}Ge	2E+4	2E+4	9E-6	3E-8	-	-
			St wall (2E+4)	-	-	-	3E-4	3E-3
		W, see ^{66}Ge	-	2E+4	9E-6	3E-8	-	-
33	Arsenic-69[b/]	W, all compounds	3E+4	1E+5	5E-5	2E-7	-	-
			St wall (4E+4)	-	-	-	6E-4	6E-3
33	Arsenic-70[b/]	W, all compounds	1E+4	5E+4	2E-5	7E-8	2E-4	2E-3
33	Arsenic-71	W, all compounds	4E+3	5E+3	2E-6	6E-9	5E-5	5E-4
33	Arsenic-72	W, all compounds	9E+2	1E+3	6E-7	2E-9	1E-5	1E-4
33	Arsenic-73	W, all compounds	8E+3	2E+3	7E-7	2E-9	1E-4	1E-3
33	Arsenic-74	W, all compounds	1E+3	8E+2	3E-7	1E-9	2E-5	2E-4
33	Arsenic-76	W, all compounds	1E+3	1E+3	6E-7	2E-9	1E-5	1E-4

Footnotes appear at the end of these three tables.

Annual Limits on Intake (ALI) and Derived Air Concentrations (DAC) of Radionuclides for Occupational Exposure
Effluent Concentrations
Concentrations for Release to Sanitary Sewerage (*Continued)*

			Table I Occupational Values			Table II Effluent Concentrations		Table III Releases to Sewers
			Col. 1	Col. 2	Col. 3	Col. 1	Col. 2	
			Oral Ingestion	Inhalation				
Atomic No.	Radionuclide	Class	ALI (μCi)	ALI (μCi)	DAC (μCi/ml)	Air (μCi/ml)	Water (μCi/ml)	Monthly Average Concentration (μCi/ml)
33	Arsenic-77	W, all compounds	4E+3	5E+3	2E-6	7E-9	-	-
			LLI wall (5E+3)	-	-	-	6E-5	6E-4
33	Arsenic-78[b/]	W, all compounds	8E+3	2E+4	9E-6	3E-8	1E-4	1E-3
34	Selenium-70[b/]	D, all compounds except those given for W	2E+4	4E+4	2E-5	5E-8	1E-4	1E-3
		W, oxides, hydroxides, carbides, and elemental Se	1E+4	4E+4	2E-5	6E-8	-	-
34	Selenium-73m[b/]	D, see ^{70}Se	6E+4	2E+5	6E-5	2E-7	4E-4	4E-3
		W, see ^{70}Se	3E+4	1E+5	6E-5	2E-7	-	-
34	Selenium-73	D, see ^{70}Se	3E+3	1E+4	5E-6	2E-8	4E-5	4E-4
		W, see ^{70}Se	-	2E+4	7E-6	2E-8	-	-
34	Selenium-75	D, see ^{70}Se	5E+2	7E+2	3E-7	1E-9	7E-6	7E-5
		W, see ^{70}Se	-	6E+2	3E-7	8E-10	-	-
34	Selenium-79	D, see ^{70}Se	6E+2	8E+2	3E-7	1E-9	8E-6	8E-5
		W, see ^{70}Se	-	6E+2	2E-7	8E-10	-	-
34	Selenium-81m[b/]	D, see ^{70}Se	4E+4	7E+4	3E-5	9E-8	3E-4	3E-3
		W, see ^{70}Se	2E+4	7E+4	3E-5	1E-7	-	-
34	Selenium-81[b/]	D, see ^{70}Se	6E+4	2E+5	9E-5	3E-7	-	-
			St wall (8E+4)	-	-	-	1E-3	1E-2
		W, see ^{70}Se	-	2E+5	1E-4	3E-7	-	-
34	Selenium-83[b/]	D, see ^{70}Se	4E+4	1E+5	5E-5	2E-7	4E-4	4E-3
		W, see ^{70}Se	3E+4	1E+5	5E-5	2E-7	-	-
35	Bromine-74m[b/]	D, bromides of H, Li, Na, K, Rb, Cs, and Fr	1E+4	4E+4	2E-5	5E-8	-	-
			St wall (2E+4)	-	-	-	3E-4	3E-3
		W, bromides of lanthanides, Be, Mg, Ca, Sr, Ba, Ra, Al, Ga, In, Tl, Ge, Sn, Pb, As, Sb, Bi, Fe, Ru, Os, Co, Rh, Ir, Ni, Pd, Pt, Cu, Ag, Au, Zn, Cd, Hg, Sc, Y, Ti, Zr, Hf, V, Nb, Ta, Mn, Tc, and Re	-	4E+4	2E-5	6E-8	-	-

Footnotes appear at the end of these three tables.

Annual Limits on Intake (ALI) and Derived Air Concentrations (DAC) of Radionuclides for Occupational Exposure
Effluent Concentrations
Concentrations for Release to Sanitary Sewerage (*Continued)*

			Table I Occupational Values			Table II Effluent Concentrations		Table III Releases to Sewers
			Col. 1	Col. 2	Col. 3	Col. 1	Col. 2	
			Oral Ingestion	Inhalation				
Atomic No.	Radionuclide	Class	ALI (μCi)	ALI (μCi)	DAC (μCi/ml)	Air (μCi/ml)	Water (μCi/ml)	Monthly Average Concentration (μCi/ml)
35	Bromine-74[b/]	D, see ^{74m}Br	2E+4	7E+4	3E-5	1E-7	-	-
			St wall (4E+4)	-	-	-	5E-4	5E-3
		W, see ^{74m}Br	–	8E+4	4E-5	1E-7	-	-
35	Bromine-75[b/]	D, see ^{74m}Br	3E+4	5E+4	2E-5	7E-8	–	–
			St wall (4E+4)	–	–	–	5E-4	5E-3
		W, see ^{74m}Br	–	5E+4	2E-5	7E-8	–	–
35	Bromine-76	D, see ^{74m}Br	4E+3	5E+3	2E-6	7E-9	5E-5	5E-4
		W, see ^{74m}Br	–	4E+3	2E-6	6E-9	–	–
35	Bromine-77	D, see ^{74m}Br	2E+4	2E+4	1E-5	3E-8	2E-4	2E-3
		W, see ^{74m}Br	–	2E+4	8E-6	3E-8	–	–
35	Bromine-80m	D, see ^{74m}Br	2E+4	2E+4	7E-6	2E-8	3E-4	3E-3
		W, see ^{74m}Br	–	1E+4	6E-6	2E-8	–	–
35	Bromine-80[b/]	D, see ^{74m}Br	5E+4	2E+5	8E-5	3E-7	–	–
			St wall (9E+4)	–	–	–	1E-3	1E-2
		W, see ^{74m}Br	–	2E+5	9E-5	3E-7	–	–
35	Bromine-82	D, see ^{74m}Br	3E+3	4E+3	2E-6	6E-9	4E-5	4E-4
		W, see ^{74m}Br	–	4E+3	2E-6	5E-9	–	–
35	Bromine-83	D, see ^{74m}Br	5E+4	6E+4	3E-5	9E-8	–	–
			St wall (7E+4)	–	–	–	9E-4	9E-3
		W, see ^{74m}Br	–	6E+4	3E-5	9E-8	–	–
35	Bromine-84[b/]	D, see ^{74m}Br	2E+4	6E+4	2E-5	8E-8	–	–
			St wall (3E+4)	–	–	–	4E-4	4E-3
		W, see ^{74m}Br	–	6E+4	3E-5	9E-8	–	–
36	Krypton-74[b/]	Submersion[a/]	–	–	3E-6	1E-8	–	–
36	Krypton-76	Submersion[a/]	–	–	9E-6	4E-8	–	–
36	Krypton-77[b/]	Submersion[a/]	–	–	4E-6	2E-8	–	–
36	Krypton-79	Submersion[a/]	–	–	2E-5	7E-8	–	–
36	Krypton-81	Submersion[a/]	–	–	7E-4	3E-6	–	–
36	Krypton-83m[b/]	Submersion[a/]	–	–	1E-2	5E-5	–	–
36	Krypton-85m	Submersion[a/]	–	–	2E-5	1E-7	–	–

Footnotes appear at the end of these three tables.

Annual Limits on Intake (ALI) and Derived Air Concentrations (DAC) of Radionuclides for Occupational Exposure
Effluent Concentrations
Concentrations for Release to Sanitary Sewerage *(Continued)*

			Table I Occupational Values			Table II Effluent Concentrations		Table III Releases to Sewers
			Col. 1	Col. 2	Col. 3	Col. 1	Col. 2	
			Oral Ingestion	Inhalation				
Atomic No.	Radionuclide	Class	ALI (μCi)	ALI (μCi)	DAC (μCi/ml)	Air (μCi/ml)	Water (μCi/ml)	Monthly Average Concentration (μCi/ml)
36	Krypton-85	Submersion[a/]	–	–	1E-4	7E-7	–	–
36	Krypton-87[b/]	Submersion[a/]	–	–	5E-6	2E-8	–	–
36	Krypton-88	Submersion[a/]	–	–	2E-6	9E-9	–	–
37	Rubidium-79[b/]	D, all compounds	4E+4	1E+5	5E-5	2E-7	–	–
			St wall (6E+4)	–	–	–	8E-4	8E-3
37	Rubidium-81m[b/]	D, all compounds	2E+5	3E+5	1E-4	5E-7	–	–
			St wall (3E+5)	–	–	–	4E-3	4E-2
37	Rubidium-81	D, all compounds	4E+4	5E+4	2E-5	7E-8	5E-4	5E-3
37	Rubidium-82m	D, all compounds	1E+4	2E+4	7E-6	2E-8	2E-4	2E-3
37	Rubidium-83	D, all compounds	6E+2	1E+3	4E-7	1E-9	9E-6	9E-5
37	Rubidium-84	D, all compounds	5E+2	8E+2	3E-7	1E-9	7E-6	7E-5
37	Rubidium-86	D, all compounds	5E+2	8E+2	3E-7	1E-9	7E-6	7E-5
37	Rubidium-87	D, all compounds	1E+3	2E+3	6E-7	2E-9	1E-5	1E-4
37	Rubidium-88[b/]	D, all compounds	2E+4	6E+4	3E-5	9E-8	–	–
			St wall (3E+4)	–	–	–	4E-4	4E-3
37	Rubidium-89[b/]	D, all compounds	4E+4	1E+5	6E-5	2E-7	–	–
			St wall (6E+4)	–	–	–	9E-4	9E-3
38	Strontium-80[b/]	D, all soluble compounds except $SrTiO_3$	4E+3	1E+4	5E-6	2E-8	6E-5	6E-4
		Y, all insoluble compounds and $SrTi0_3$	–	1E+4	5E-6	2E-8	–	–
38	Strontium-81[b/]	D, see ^{80}Sr	3E+4	8E+4	3E-5	1E-7	3E-4	3E-3
		Y, see ^{80}Sr	2E+4	8E+4	3E-5	1E-7	–	–
38	Strontium-82	D, see ^{80}Sr	3E+2	4E+2	2E-7	6E-10	–	–
			LLI wall (2E+2)	–	–	–	3E-6	3E-5
		Y, see ^{80}Sr	2E+2	9E+1	4E-8	1E-10	–	–
38	Strontium-83	D, see ^{80}Sr	3E+3	7E+3	3E-6	1E-8	3E-5	3E-4
		Y, see ^{80}Sr	2E+3	4E+3	1E-6	5E-9	–	–
38	Strontium-85m[b/]	D, see ^{80}Sr	2E+5	6E+5	3E-4	9E-7	3E-3	3E-2
		Y, see ^{80}Sr	–	8E+5	4E-4	1E-6	–	–

Footnotes appear at the end of these three tables.

Annual Limits on Intake (ALI) and Derived Air Concentrations (DAC) of Radionuclides for Occupational Exposure
Effluent Concentrations
Concentrations for Release to Sanitary Sewerage *(Continued)*

			Table I Occupational Values			Table II Effluent Concentrations		Table III Releases to Sewers
			Col. 1	Col. 2	Col. 3	Col. 1	Col. 2	
			Oral Ingestion	Inhalation				Monthly Average
Atomic No.	Radionuclide	Class	ALI (μCi)	ALI (μCi)	DAC (μCi/ml)	Air (μCi/ml)	Water (μCi/ml)	Concentration (μCi/ml)
38	Strontium-85	D, see ^{80}Sr	3E+3	3E+3	1E-6	4E-9	4E-5	4E-4
		Y, see ^{80}Sr	–	2E+3	6E-7	2E-9	–	–
38	Strontium-87m	D, see ^{80}Sr	5E+4	1E+5	5E-5	2E-7	6E-4	6E-3
		Y, see ^{80}Sr	4E+4	2E+5	6E-5	2E-7	–	–
38	Strontium-89	D, see ^{80}Sr	6E+2	8E+2	4E-7	1E-9	–	–
			LLI wall (6E+2)	–	–	–	8E-6	8E-5
		Y, see ^{80}Sr	5E+2	1E+2	6E-8	2E-10	–	–
38	Strontium-90	D, see ^{80}Sr	3E+1	2E+1	8E-9	–	–	–
			Bone surf (4E+1)	Bone surf (2E+1)	–	3E-11	5E-7	5E-6
		Y, see ^{80}Sr	–	4E+0	2E-9	6E-12	–	–
38	Strontium-91	D, see ^{80}Sr	2E+3	6E+3	2E-6	8E-9	2E-5	2E-4
		Y, see ^{80}Sr	–	4E+3	1E-6	5E-9	–	–
38	Strontium-92	D, see ^{80}Sr	3E+3	9E+3	4E-6	1E-8	4E-5	4E-4
		Y, see ^{80}Sr	–	7E+3	3E-6	9E-9	–	–
39	Yttrium-86m[b/]	W, all compounds except those given for Y	2E+4	6E+4	2E-5	8E-8	3E-4	3E-3
		Y, oxides and hydroxides	–	5E+4	2E-5	8E-8	–	–
39	Yttrium-86	W, see ^{86m}Y	1E+3	3E+3	1E-6	5E-9	2E-5	2E-4
		Y, see ^{86m}Y	–	3E+3	1E-6	5E-9	–	–
39	Yttrium-87	W, see ^{86m}Y	2E+3	3E+3	1E-6	5E-9	3E-5	3E-4
		Y, see ^{86m}Y	–	3E+3	1E-6	5E-9	–	–
39	Yttrium-88	W, see ^{86m}Y	1E+3	3E+2	1E-7	3E-10	1E-5	1E-4
		Y, see ^{86m}Y	–	2E+2	1E-7	3E-10	–	–
39	Yttrium-90m	W, see ^{86m}Y	8E+3	1E+4	5E-6	2E-8	1E-4	1E-3
		Y, see ^{86m}Y	–	1E+4	5E-6	2E-8	–	–
39	Yttrium-90	W, see ^{86m}Y	4E+2	7E+2	3E-7	9E-10	–	–
			LLI wall (5E+2)	–	–	–	7E-6	7E-5
		Y, see ^{86m}Y	–	6E+2	3E-7	9E-10	–	–
39	Yttrium-91m[b/]	W, see ^{86m}Y	1E+5	2E+5	1E-4	3E-7	2E-3	2E-2
		Y, see ^{86m}Y	–	2E+5	7E-5	2E-7	–	–
39	Yttrium-91	W, see ^{86m}Y	5E+2	2E+2	7E-8	2E-10	–	–
			LLI wall (6E+2)	–	–	–	8E-6	8E-5
		Y, see ^{86m}Y	–	1E+2	5E-8	2E-10	–	–

Footnotes appear at the end of these three tables.

Annual Limits on Intake (ALI) and Derived Air Concentrations (DAC) of Radionuclides for Occupational Exposure
Effluent Concentrations
Concentrations for Release to Sanitary Sewerage *(Continued)*

			Table I Occupational Values			Table II Effluent Concentrations		Table III Releases to Sewers
			Col. 1	Col. 2	Col. 3	Col. 1	Col. 2	
			Oral Ingestion	Inhalation				
Atomic No.	Radionuclide	Class	ALI (μCi)	ALI (μCi)	DAC (μCi/ml)	Air (μCi/ml)	Water (μCi/ml)	Monthly Average Concentration (μCi/ml)
39	Yttrium-92	W, see ^{86m}Y	3E+3	9E+3	4E-6	1E-8	4E-5	4E-4
		Y, see ^{86m}Y	–	8E+3	3E-6	1E-8	–	–
39	Yttrium-93	W, see ^{86m}Y	1E+3	3E+3	1E-6	4E-9	2E-5	2E-4
		Y, see ^{86m}Y	–	2E+3	1E-6	3E-9	–	–
39	Yttrium-94[b/]	W, see ^{86m}Y	2E+4	8E+4	3E-5	1E-7	–	–
			St wall (3E+4)	–	–	–	4E-4	4E-3
		Y, see ^{86m}Y	–	8E+4	3E-5	1E-7	–	–
39	Yttrium-95[b/]	W, see ^{86m}Y	4E+4	2E+5	6E-5	2E-7	–	–
			St wall (5E+4)	–	–	–	7E-4	7E-3
		Y, see ^{86m}Y	–	1E+5	6E-5	2E-7	–	–
40	Zirconium-86	D, all compounds except those given for W and Y	1E+3	4E+3	2E-6	6E-9	2E-5	2E-4
		W, oxides, hydroxides, halides, and nitrates	–	3E+3	1E-6	4E-9	–	–
		Y, carbide	–	2E+3	1E-6	3E-9	–	–
40	Zirconium-88	D, see ^{86}Zr	4E+3	2E+2	9E-8	3E-10	5E-5	5E-4
		W, see ^{86}Zr	–	5E+2	2E-7	7E-10	–	–
		Y, see ^{86}Zr	–	3E+2	1E-7	4E-10	–	–
40	Zirconium-89	D, see ^{86}Zr	2E+3	4E+3	1E-6	5E-9	2E-5	2E-4
		W, see ^{86}Zr	–	2E+3	1E-6	3E-9	–	–
		Y, see ^{86}Zr	–	2E+3	1E-6	3E-9	–	–
40	Zirconium-93	D, see ^{86}Zr	1E+3	6E+0	3E-9	–	–	–
			Bone surf (3E+3)	Bone surf (2E+1)	–	2E-11	4E-5	4E-4
		W, see ^{86}Zr	–	2E+1	1E-8	–	–	–
			–	Bone surf (6E+1)	–	9E-11	–	–
		Y, see ^{86}Zr	–	6E+1	2E-8	–	–	–
			–	Bone surf (7E+1)	–	9E-11	–	–
40	Zirconium-95	D, see ^{86}Zr	1E+3	1E+2	5E-8	–	2E-5	2E-4
			–	Bone surf (3E+2)	–	4E-10	–	–
		W, see ^{86}Zr	–	4E+2	2E-7	5E-10	–	–
		Y, see ^{86}Zr	–	3E+2	1E-7	4E-10	–	–
40	Zirconium-97	D, see ^{86}Zr	6E+2	2E+3	8E-7	3E-9	9E-6	9E-5
		W, see ^{86}Zr	–	1E+3	6E-7	2E-9	–	–
		Y, see ^{86}Zr	–	1E+3	5E-7	2E-9	–	–

Footnotes appear at the end of these three tables.

Annual Limits on Intake (ALI) and Derived Air Concentrations (DAC) of Radionuclides for Occupational Exposure
Effluent Concentrations
Concentrations for Release to Sanitary Sewerage *(Continued)*

			Table I Occupational Values			Table II Effluent Concentrations		Table III Releases to Sewers
			Col. 1	Col. 2	Col. 3	Col. 1	Col. 2	
			Oral Ingestion	Inhalation				
Atomic No.	Radionuclide	Class	ALI (μCi)	ALI (μCi)	DAC (μCi/ml)	Air (μCi/ml)	Water (μCi/ml)	Monthly Average Concentration (μCi/ml)
41	Niobium-88[b/]	W, all compounds except those given for Y	5E+4	2E+5	9E-5	3E-7	–	–
		St wall	(7E+4)	–	–	–	1E-3	1E-2
		Y, oxides and hydroxides	–	2E+5	9E-5	3E-7	–	–
41	Niobium-89[b/] (66 min)	W, see ^{88}Nb	1E+4	4E+4	2E-5	6E-8	1E-4	1E-3
		Y, see ^{88}Nb	–	4E+4	2E-5	5E-8	–	–
41	Niobium-89 (122 min)	W, see ^{88}Nb	5E+3	2E+4	8E-6	3E-8	7E-5	7E-4
		Y, see ^{88}Nb	–	2E+4	6E-6	2E-8	–	–
41	Niobium-90	W, see ^{88}Nb	1E+3	3E+3	1E-6	4E-9	1E-5	1E-4
		Y, see ^{88}Nb	–	2E+3	1E-6	3E-9	–	–
41	Niobium-93m	W, see ^{88}Nb	9E+3	2E+3	8E-7	3E-9	–	–
		LLI wall	(1E+4)	–	–	–	2E-4	2E-3
		Y, see ^{88}Nb	–	2E+2	7E-8	2E-10	–	–
41	Niobium-94	W, see ^{88}Nb	9E+2	2E+2	8E-8	3E-10	1E-5	1E-4
		Y, see ^{88}Nb	–	2E+1	6E-9	2E-11	–	–
41	Niobium-95m	W, see ^{88}Nb	2E+3	3E+3	1E-6	4E-9	–	–
		LLI wall	(2E+3)	–	–	–	3E-5	3E-4
		Y, see ^{88}Nb	–	2E+3	9E-7	3E-9	–	–
41	Niobium-95	W, see ^{88}Nb	2E+3	1E+3	5E-7	2E-9	3E-5	3E-4
		Y, see ^{88}Nb	–	1E+3	5E-7	2E-9	–	–
41	Niobium-96	W, see ^{88}Nb	1E+3	3E+3	1E-6	4E-9	2E-5	2E-4
		Y, see ^{88}Nb	–	2E+3	1E-6	3E-9	–	–
41	Niobium-97[b/]	W, see ^{88}Nb	2E+4	8E+4	3E-5	1E-7	3E-4	3E-3
		Y, see ^{88}Nb	–	7E+4	3E-5	1E-7	–	–
41	Niobium-98[b/]	W, see ^{88}Nb	1E+4	5E+4	2E-5	8E-8	2E-4	2E-3
		Y, see ^{88}Nb	–	5E+4	2E-5	7E-8	–	–
42	Molybdenum-90	D, all compounds except those given for Y	4E+3	7E+3	3E-6	1E-8	3E-5	3E-4
		Y, oxides, hydroxides, and MoS_2	2E+3	5E+3	2E-6	6E-9	–	–
42	Molybdenum-93m	D, see ^{90}Mo	9E+3	2E+4	7E-6	2E-8	6E-5	6E-4
		Y, see ^{90}Mo	4E+3	1E+4	6E-6	2E-8	–	–

Footnotes appear at the end of these three tables.

Annual Limits on Intake (ALI) and Derived Air Concentrations (DAC) of Radionuclides for Occupational Exposure
Effluent Concentrations
Concentrations for Release to Sanitary Sewerage *(Continued)*

			Table I Occupational Values			Table II Effluent Concentrations		Table III Releases to Sewers
			Col. 1	Col. 2	Col. 3	Col. 1	Col. 2	
			Oral Ingestion	Inhalation				Monthly Average
Atomic No.	Radionuclide	Class	ALI (μCi)	ALI (μCi)	DAC (μCi/ml)	Air (μCi/ml)	Water (μCi/ml)	Concentration (μCi/ml)
42	Molybdenum-93	D, see ^{90}Mo	4E+3	5E+3	2E-6	8E-9	5E-5	5E-4
		Y, see ^{90}Mo	2E+4	2E+2	8E-8	2E-10	–	–
42	Molybdenum-99	D, see ^{90}Mo	2E+3	3E+3	1E-6	4E-9	–	–
			LLI wall (1E+3)	–	–	–	2E-5	2E-4
		Y, see ^{90}Mo	1E+3	1E+3	6E-7	2E-9	–	–
42	Molybdenum-101[b/]	D, see ^{90}Mo	4E+4	1E+5	6E-5	2E-7	–	–
			St wall (5E+4)	–	–	–	7E-4	7E-3
		Y, see ^{90}Mo	–	1E+5	6E-5	2E-7	–	–
43	Technetium-93m[b/]	D, all compounds except those given for W	7E+4	2E+5	6E-5	2E-7	1E-3	1E-2
		W, oxides, hydroxides, halides, and nitrates	–	3E+5	1E-4	4E-7	–	–
43	Technetium-93	D, see ^{93m}Tc	3E+4	7E+4	3E-5	1E-7	4E-4	4E-3
		W, see ^{93m}Tc	–	1E+5	4E-5	1E-7	–	–
43	Technetium-94m[b/]	D, see ^{93m}Tc	2E+4	4E+4	2E-5	6E-8	3E-4	3E-3
		W, see ^{93m}Tc	–	6E+4	2E-5	8E-8	–	–
43	Technetium-94	D, see ^{93m}Tc	9E+3	2E+4	8E-6	3E-8	1E-4	1E-3
		W, see ^{93m}Tc	–	2E+4	1E-5	3E-8	–	–
43	Technetium-95m	D, see ^{93m}Tc	4E+3	5E+3	2E-6	8E-9	5E-5	5E-4
		W, see ^{93m}Tc	–	2E+3	8E-7	3E-9	–	–
43	Technetium-95	D, see ^{93m}Tc	1E+4	2E+4	9E-6	3E-8	1E-4	1E-3
		W, see ^{93m}Tc	–	2E+4	8E-6	3E-8	–	–
43	Technetium-96m[b/]	D, see ^{93m}Tc	2E+5	3E+5	1E-4	4E-7	2E-3	2E-2
		W, see ^{93m}Tc	–	2E+5	1E-4	3E-7	–	–
43	Technetium-96	D, see ^{93m}Tc	2E+3	3E+3	1E-6	5E-9	3E-5	3E-4
		W, see ^{93m}Tc	–	2E+3	9E-7	3E-9	–	–
43	Technetium-97m	D, see ^{93m}Tc	5E+3	7E+3	3E-6	–	6E-5	6E-4
			–	St wall (7E+3)	–	1E-8	–	–
		W, see ^{93m}Tc	–	1E+3	5E-7	2E-9	–	–
43	Technetium-97	D, see ^{93m}Tc	4E+4	5E+4	2E-5	7E-8	5E-4	5E-3
		W, see ^{93m}Tc	–	6E+3	2E-6	8E-9	–	–
43	Technetium-98	D, see ^{93m}Tc	1E+3	2E+3	7E-7	2E-9	1E-5	1E-4
		W, see ^{93m}Tc	–	3E+2	1E-7	4E-10	–	–
43	Technetium-99m	D, see ^{93m}Tc	8E+4	2E+5	6E-5	2E-7	1E-3	1E-2
		W, see ^{93m}Tc	–	2E+5	1E-4	3E-7	–	–

Footnotes appear at the end of these three tables.

Annual Limits on Intake (ALI) and Derived Air Concentrations (DAC) of Radionuclides for Occupational Exposure
Effluent Concentrations
Concentrations for Release to Sanitary Sewerage *(Continued)*

			Table I Occupational Values			Table II Effluent Concentrations		Table III Releases to Sewers
			Col. 1	Col. 2	Col. 3	Col. 1	Col. 2	
			Oral Ingestion	Inhalation				
Atomic No.	Radionuclide	Class	ALI (μCi)	ALI (μCi)	DAC (μCi/ml)	Air (μCi/ml)	Water (μCi/ml)	Monthly Average Concentration (μCi/ml)
43	Technetium-99	D, see ^{93m}Tc	4E+3	5E+3	2E-6	–	6E-5	6E-4
			–	St wall (6E+3)	–	8E-9	–	–
		W, see ^{93m}Tc	–	7E+2	3E-7	9E-10	–	–
43	Technetium-101[b/]	D, see ^{93m}Tc	9E+4	3E+5	1E-4	5E-7	–	–
			St wall (1E+5)	–	–	–	2E-3	2E-2
		W, see ^{93m}Tc	–	4E+5	2E-4	5E-7	–	–
43	Technetium-104[b/]	D, see ^{93m}Tc	2E+4	7E+4	3E-5	1E-7	–	–
			St wall (3E+4)	–	–	–	4E-4	4E-3
		W, see ^{93m}Tc	–	9E+4	4E-5	1E-7	–	–
44	Ruthenium-94[b/]	D, all compounds except those given for W and Y	2E+4	4E+4	2E-5	6E-8	2E-4	2E-3
		W, halides	–	6E+4	3E-5	9E-8	–	–
		Y, oxides and hydroxides	–	6E+4	2E-5	8E-8	–	–
44	Ruthenium-97	D, see ^{94}Ru	8E+3	2E+4	8E-6	3E-8	1E-4	1E-3
		W, see ^{94}Ru	–	1E+4	5E-6	2E-8	–	–
		Y, see ^{94}Ru	–	1E+4	5E-6	2E-8	–	–
44	Ruthenium-103	D, see ^{94}Ru	2E+3	2E+3	7E-7	2E-9	3E-5	3E-4
		W, see ^{94}Ru	–	1E+3	4E-7	1E-9	–	–
		Y, see ^{94}Ru	–	6E+2	3E-7	9E-10	–	–
44	Ruthenium-105	D, see ^{94}Ru	5E+3	1E+4	6E-6	2E-8	7E-5	7E-4
		W, see ^{94}Ru	–	1E+4	6E-6	2E-8	–	–
		Y, see ^{94}Ru	–	1E+4	5E-6	2E-8	–	–
44	Ruthenium-106	D, see ^{94}Ru	2E+2	9E+1	4E-8	1E-10	–	–
			LLI wall (2E+2)	–	–	–	3E-6	3E-5
		W, see ^{94}Ru	–	5E+1	2E-8	8E-11	–	–
		Y, see ^{94}Ru	–	1E+1	5E-9	2E-11	–	–
45	Rhodium-99m	D, all compounds except those given for W and Y	2E+4	6E+4	2E-5	8E-8	2E-4	2E-3
		W, halides	–	8E+4	3E-5	1E-7	–	–
		Y, oxides and hydroxides	–	7E+4	3E-5	9E-8	–	–
45	Rhodium-99	D, see ^{99m}Rh	2E+3	3E+3	1E-6	4E-9	3E-5	3E-4
		W, see ^{99m}Rh	–	2E+3	9E-7	3E-9	–	–
		Y, see ^{99m}Rh	–	2E+3	8E-7	3E-9	–	–
45	Rhodium-100	D, see ^{99m}Rh	2E+3	5E+3	2E-6	7E-9	2E-5	2E-4
		W, see ^{99m}Rh	–	4E+3	2E-6	6E-9	–	–
		Y, see ^{99m}Rh	–	4E+3	2E-6	5E-9	–	–

Footnotes appear at the end of these three tables.

Annual Limits on Intake (ALI) and Derived Air Concentrations (DAC) of Radionuclides for Occupational Exposure
Effluent Concentrations
Concentrations for Release to Sanitary Sewerage *(Continued)*

			Table I Occupational Values			Table II Effluent Concentrations		Table III Releases to Sewers
			Col. 1	Col. 2	Col. 3	Col. 1	Col. 2	
			Oral Ingestion	Inhalation				Monthly Average
Atomic No.	Radionuclide	Class	ALI (μCi)	ALI (μCi)	DAC (μCi/ml)	Air (μCi/ml)	Water (μCi/ml)	Concentration (μCi/ml)
45	Rhodium-101m	D, see ^{99m}Rh	6E+3	1E+4	5E-6	2E-8	8E-5	8E-4
		W, see ^{99m}Rh	–	8E+3	4E-6	1E-8	–	–
		Y, see ^{99m}Rh	–	8E+3	3E-6	1E-8	–	–
45	Rhodium-101	D, see ^{99m}Rh	2E+3	5E+2	2E-7	7E-10	3E-5	3E-4
		W, see ^{99m}Rh	–	8E+2	3E-7	1E-9	–	–
		Y, see ^{99m}Rh	–	2E+2	6E-8	2E-10	–	–
45	Rhodium-102m	D, see ^{99m}Rh	1E+3	5E+2	2E-7	7E-10	–	–
			LLI wall (1E+3)	–	–	–	2E-5	2E-4
		W, see ^{99m}Rh	–	4E+2	2E-7	5E-10	–	–
		Y, see ^{99m}Rh	–	1E+2	5E-8	2E-10	–	–
45	Rhodium-102	D, see ^{99m}Rh	6E+2	9E+1	4E-8	1E-10	8E-6	8E-5
		W, see ^{99m}Rh	–	2E+2	7E-8	2E-10	–	–
		Y, see ^{99m}Rh	–	6E+1	2E-8	8E-11	–	–
45	Rhodium-103m[b/]	D, see ^{99m}Rh	4E+5	1E+6	5E-4	2E-6	6E-3	6E-2
		W, see ^{99m}Rh	–	1E+6	5E-4	2E-6	–	–
		Y, see ^{99m}Rh	–	1E+6	5E-4	2E-6	–	–
45	Rhodium-105	D, see ^{99m}Rh	4E+3	1E+4	5E-6	2E-8	–	–
			LLI wall (4E+3)	–	–	–	5E-5	5E-4
		W, see ^{99m}Rh	–	6E+3	3E-6	9E-9	–	–
		Y, see ^{99m}Rh	–	6E+3	2E-6	8E-9	–	–
45	Rhodium-106m	D, see ^{99m}Rh	8E+3	3E+4	1E-5	4E-8	1E-4	1E-3
		W, see ^{99m}Rh	–	4E+4	2E-5	5E-8	–	–
		Y, see ^{99m}Rh	–	4E+4	1E-5	5E-8	–	–
45	Rhodium-107[b/]	D, see ^{99m}Rh	7E+4	2E+5	1E-4	3E-7	–	–
			St wall (9E+4)	–	–	–	1E-3	1E-2
		W, see ^{99m}Rh	–	3E+5	1E-4	4E-7	–	–
		Y, see ^{99m}Rh	–	3E+5	1E-4	3E-7	–	–
46	Palladium-100	D, all compound44s except those given for W and4 Y	1E+3	1E+3	6E-7	2E-9	2E-5	2E-4
		W, nitrates	–	1E+3	5E-7	2E-9	–	–
		Y, oxides and hydroxides	–	1E+3	6E-7	2E-9	–	–
46	Palladium-101	D, see ^{100}Pd	1E+4	3E+4	1E-5	5E-8	2E-4	2E-3
		W, see ^{100}Pd	–	3E+4	1E-5	5E-8	–	–
		Y, see ^{100}Pd	–	3E+4	1E-5	4E-8	–	–

Footnotes appear at the end of these three tables.

Annual Limits on Intake (ALI) and Derived Air Concentrations (DAC) of Radionuclides for Occupational Exposure
Effluent Concentrations
Concentrations for Release to Sanitary Sewerage *(Continued)*

			Table I Occupational Values			Table II Effluent Concentrations		Table III Releases to Sewers
			Col. 1	Col. 2	Col. 3	Col. 1	Col. 2	
			Oral Ingestion	Inhalation				Monthly Average
Atomic No.	Radionuclide	Class	ALI (μCi)	ALI (μCi)	DAC (μCi/ml)	Air (μCi/ml)	Water (μCi/ml)	Concentration (μCi/ml)
46	Palladium-103	D, see ^{100}Pd	6E+3	6E+3	3E-6	9E-9	–	–
			LLI wall (7E+3)	–	–	–	1E-4	1E-3
		W, see ^{100}Pd	–	4E+3	2E-6	6E-9	–	–
		Y, see ^{100}Pd	–	4E+3	1E-6	5E-9	–	–
46	Palladium-107	D, see ^{100}Pd	3E+4	2E+4	9E-6	–	–	–
			LLI wall (4E+4)	Kidneys (2E+4)	–	3E-8	5E-4	5E-3
		W, see ^{100}Pd	–	7E+3	3E-6	1E-8	–	–
		Y, see ^{100}Pd	–	4E+2	2E-7	6E-10	–	–
46	Palladium-109	D, see ^{100}Pd	2E+3	6E+3	3E-6	9E-9	3E-5	3E-4
		W, see ^{100}Pd	–	5E+3	2E-6	8E-9	–	–
		Y, see ^{100}Pd	–	5E+3	2E-6	6E-9	–	–
47	Silver-102[b/]	D, all compounds except those given for W and Y	5E+4	2E+5	8E-5	2E-7	–	–
			St wall (6E+4)	–	–	–	9E-4	9E-3
		W, nitrates and sulfides	–	2E+5	9E-5	3E-7	–	–
		Y, oxides and hydroxides	–	2E+5	8E-5	3E-7	–	–
47	Silver-103[b/]	D, see ^{102}Ag	4E+4	1E+5	4E-5	1E-7	5E-4	5E-3
		W, see ^{102}Ag	–	1E+5	5E-5	2E-7	–	–
		Y, see ^{102}Ag	–	1E+5	5E-5	2E-7	–	–
47	Silver-104m[b/]	D, see ^{102}Ag	3E+4	9E+4	4E-5	1E-7	4E-4	4E-3
		W, see ^{102}Ag	–	1E+5	5E-5	2E-7	–	–
		Y, see ^{102}Ag	–	1E+5	5E-5	2E-7	–	–
47	Silver-104[b/]	D, see ^{102}Ag	2E+4	7E+4	3E-5	1E-7	3E-4	3E-3
		W, see ^{102}Ag	–	1E+5	6E-5	2E-7	–	–
		Y, see ^{102}Ag	–	1E+5	6E-5	2E-7	–	–
47	Silver-105	D, see ^{102}Ag	3E+3	1E+3	4E-7	1E-9	4E-5	4E-4
		W, see ^{102}Ag	–	2E+3	7E-7	2E-9	–	–
		Y, see ^{102}Ag	–	2E+3	7E-7	2E-9	–	–
47	Silver-106m	D, see ^{102}Ag	8E+2	7E+2	3E-7	1E-9	1E-5	1E-4
		W, see ^{102}Ag	–	9E+2	4E-7	1E-9	–	–
		Y, see ^{102}Ag	–	9E+2	4E-7	1E-9	–	–
47	Silver-106[b/]	D, see ^{102}Ag	6E+4	2E+5	8E-5	3E-7	–	–
			St wall (6E+4)	–	–	–	9E-4	9E-3
		W, see ^{102}Ag	–	2E+5	9E-5	3E-7	–	–
		Y, see ^{102}Ag	–	2E+5	8E-5	3E-7	–	–

Footnotes appear at the end of these three tables.

Annual Limits on Intake (ALI) and Derived Air Concentrations (DAC) of Radionuclides for Occupational Exposure
Effluent Concentrations
Concentrations for Release to Sanitary Sewerage *(Continued)*

			Table I Occupational Values			Table II Effluent Concentrations		Table III Releases to Sewers
			Col. 1	Col. 2	Col. 3	Col. 1	Col. 2	
			Oral Ingestion	Inhalation				
Atomic No.	Radionuclide	Class	ALI (μCi)	ALI (μCi)	DAC (μCi/ml)	Air (μCi/ml)	Water (μCi/ml)	Monthly Average Concentration (μCi/ml)
47	Silver-108m	D, see ^{102}Ag	6E+2	2E+2	8E-8	3E-10	9E-6	9E-5
		W, see ^{102}Ag	–	3E+2	1E-7	4E-10	–	–
		Y, see ^{102}Ag	–	2E+1	1E-8	3E-11	–	–
47	Silver-110m	D, see ^{102}Ag	5E+2	1E+2	5E-8	2E-10	6E-6	6E-5
		W, see ^{102}Ag	–	2E+2	8E-8	3E-10	–	–
		Y, see ^{102}Ag	–	9E+1	4E-8	1E-10	–	–
47	Silver-111	D, see ^{102}Ag	9E+2	2E+3	6E-7	–	–	–
			LLI wall (1E+3)	Liver (2E+3)	–	2E-9	2E-5	2E-4
		W, see ^{102}Ag	–	9E+2	4E-7	1E-9	–	–
		Y, see ^{102}Ag	–	9E+2	4E-7	1E-9	–	–
47	Silver-112	D, see ^{102}Ag	3E+3	8E+3	3E-6	1E-8	4E-5	4E-4
		W, see ^{102}Ag	–	1E+4	4E-6	1E-8	–	–
		Y, see ^{102}Ag	–	9E+3	4E-6	1E-8	–	–
47	Silver-115[b/]	D, see ^{102}Ag	3E+4	9E+4	4E-5	1E-7	–	–
			St wall (3E+4)	–	–	–	4E-4	4E-3
		W, see ^{102}Ag	–	9E+4	4E-5	1E-7	–	–
		Y, see ^{102}Ag	–	8E+4	3E-5	1E-7	–	–
48	Cadmium-104[b/]	D, all compounds except those given for W and Y	2E+4	7E+4	3E-5	9E-8	3E-4	3E-3
		W, sulfides, halides, and nitrates	–	1E+5	5E-5	2E-7	–	–
		Y, oxides and hydroxides	–	1E+5	5E-5	2E-7	–	–
48	Cadmium-107	D, see ^{104}Cd	2E+4	5E+4	2E-5	8E-8	3E-4	3E-3
		W, see ^{104}Cd	–	6E+4	2E-5	8E-8	–	–
		Y, see ^{104}Cd	–	5E+4	2E-5	7E-8	–	–
48	Cadmium-109	D, see ^{104}Cd	3E+2	4E+1	1E-8	–	–	–
			Kidneys (4E+2)	Kidneys (5E+1)	–	7E-11	6E-6	6E-5
		W, see ^{104}Cd	–	1E+2	5E-8	–	–	–
			–	Kidneys (1E+2)	–	2E-10	–	–
		Y, see ^{104}Cd	–	1E+2	5E-8	2E-10	–	–
48	Cadmium-113m	D, see ^{104}Cd	2E+1	2E+0	1E-9	–	–	–
			Kidneys (4E+1)	Kidneys (4E+0)	–	5E-12	5E-7	5E-6
		W, see ^{104}Cd	–	8E+0	4E-9	–	–	–
			–	Kidneys (1E+1)	–	2E-11	–	–
		Y, see ^{104}Cd	–	1E+1	5E-9	2E-11	–	–

Footnotes appear at the end of these three tables.

Annual Limits on Intake (ALI) and Derived Air Concentrations (DAC) of Radionuclides for Occupational Exposure
Effluent Concentrations
Concentrations for Release to Sanitary Sewerage *(Continued)*

			Table I Occupational Values			Table II Effluent Concentrations		Table III Releases to Sewers
			Col. 1	Col. 2	Col. 3	Col. 1	Col. 2	
			Oral Ingestion	Inhalation				
Atomic No.	Radionuclide	Class	ALI (μCi)	ALI (μCi)	DAC (μCi/ml)	Air (μCi/ml)	Water (μCi/ml)	Monthly Average Concentration (μCi/ml)
48	Cadmium-113	D, see ^{104}Cd	2E+1	2E+0	9E-10	–	–	–
			Kidneys (3E+1)	Kidneys (3E+0)	–	5E-12	4E-7	4E-6
		W, see ^{104}Cd	–	8E+0	3E-9	–	–	–
			–	Kidneys (1E+1)	–	2E-11	–	–
		Y, see ^{104}Cd	–	1E+1	6E-9	2E-11	–	–
48	Cadmium-115m	D, see ^{104}Cd	3E+2	5E+1	2E-8	–	4E-6	4E-5
			–	Kidneys (8E+1)	–	1E-10	–	–
		W, see ^{104}Cd	–	1E+2	5E-8	2E-10	–	–
		Y, see ^{104}Cd	–	1E+2	6E-8	2E-10	–	–
48	Cadmium-115	D, see ^{104}Cd	9E+2	1E+3	6E-7	2E-9	–	–
			LLI wall (1E+3)	–	–	–	1E-5	1E-4
		W, see ^{104}Cd	–	1E+3	5E-7	2E-9	–	–
		Y, see ^{104}Cd	–	1E+3	6E-7	2E-9	–	–
48	Cadmium-117m	D, see ^{104}Cd	5E+3	1E+4	5E-6	2E-8	6E-5	6E-4
		W, see ^{104}Cd	–	2E+4	7E-6	2E-8	–	–
		Y, see ^{104}Cd	–	1E+4	6E-6	2E-8	–	–
48	Cadmium-117	D, see ^{104}Cd	5E+3	1E+4	5E-6	2E-8	6E-5	6E-4
		W, see ^{104}Cd	–	2E+4	7E-6	2E-8	–	–
		Y, see ^{104}Cd	–	1E+4	6E-6	2E-8	–	–
49	Indium-109	D, all compounds except those given for W	2E+4	4E+4	2E-5	6E-8	3E-4	3E-3
		W, oxides, hydroxides, halides, and nitrates	–	6E+4	3E-5	9E-8	–	–
49	Indium-110[b/] (69.1 min)	D, see ^{109}In	2E+4	4E+4	2E-5	6E-8	2E-4	2E-3
		W, see ^{109}In	–	6E+4	2E-5	8E-8	–	–
49	Indium-110 (4.9 h)	D, see ^{109}In	5E+3	2E+4	7E-6	2E-8	7E-5	7E-4
		W, see ^{109}In	–	2E+4	8E-6	3E-8	–	–
49	Indium-111	D, see ^{109}In	4E+3	6E+3	3E-6	9E-9	6E-5	6E-4
		W, see ^{109}In	–	6E+3	3E-6	9E-9	–	–
49	Indium-112[b/]	D, see ^{109}In	2E+5	6E+5	3E-4	9E-7	2E-3	2E-2
		W, see ^{109}In	–	7E+5	3E-4	1E-6	–	–
49	Indium-113m[b/]	D, see ^{109}In	5E+4	1E+5	6E-5	2E-7	7E-4	7E-3
		W, see ^{109}In	–	2E+5	8E-5	3E-7	–	–

Footnotes appear at the end of these three tables.

Annual Limits on Intake (ALI) and Derived Air Concentrations (DAC) of Radionuclides for Occupational Exposure
Effluent Concentrations
Concentrations for Release to Sanitary Sewerage *(Continued)*

			Table I Occupational Values			Table II Effluent Concentrations		Table III Releases to Sewers
			Col. 1	Col. 2	Col. 3	Col. 1	Col. 2	
			Oral Ingestion	Inhalation				
Atomic No.	Radionuclide	Class	ALI (μCi)	ALI (μCi)	DAC (μCi/ml)	Air (μCi/ml)	Water (μCi/ml)	Monthly Average Concentration (μCi/ml)
49	Indium-114m	D, see ^{109}In	3E+2	6E+1	3E-8	9E-11	–	–
			LLI wall (4E+2)	–	–	–	5E-6	5E-5
		W, see ^{109}In	–	1E+2	4E-8	1E-10	–	–
49	Indium-115m	D, see ^{109}In	1E+4	4E+4	2E-5	6E-8	2E-4	2E-3
		W, see ^{109}In	–	5E+4	2E-5	7E-8	–	–
49	Indium-115	D, see ^{109}In	4E+1	1E+0	6E-10	2E-12	5E-7	5E-6
		W, see ^{109}In	–	5E+0	2E-9	8E-12	–	–
49	Indium-116m[b/]	D, see ^{109}In	2E+4	8E+4	3E-5	1E-7	3E-4	3E-3
		W, see ^{109}In	–	1E+5	5E-5	2E-7	–	–
49	Indium-117m[b/]	D, see ^{109}In	1E+4	3E+4	1E-5	5E-8	2E-4	2E-3
		W, see ^{109}In	–	4E+4	2E-5	6E-8	–	–
49	Indium-117[b/]	D, see ^{109}In	6E+4	2E+5	7E-5	2E-7	8E-4	8E-3
		W, see ^{109}In	–	2E+5	9E-5	3E-7	–	–
49	Indium-119m[b/]	D, see ^{109}In	4E+4	1E+5	5E-5	2E-7	–	–
			St wall (5E+4)	–	–	–	7E-4	7E-3
		W, see ^{109}In	–	1E+5	6E-5	2E-7	–	–
50	Tin-110	D, all compounds except those given for W	4E+3	1E+4	5E-6	2E-8	5E-5	5E-4
		W, sulfides, oxides, hydroxides, halides, nitrates, and stannic phosphate	–	1E+4	5E-6	2E-8	–	–
50	Tin-111[b/]	D, see ^{110}Sn	7E+4	2E+5	9E-5	3E-7	1E-3	1E-2
		W, see ^{110}Sn	–	3E+5	1E-4	4E-7	–	–
50	Tin-113	D, see ^{110}Sn	2E+3	1E+3	5E-7	2E-9	–	–
			LLI wall (2E+3)	–	–	–	3E-5	3E-4
		W, see ^{110}Sn	–	5E+2	2E-7	8E-10	–	–
50	Tin-117m	D, see ^{110}Sn	2E+3	1E+3	5E-7	–	–	–
			LLI wall (2E+3)	Bone surf (2E+3)	–	3E-9	3E-5	3E-4
		W, see ^{110}Sn	–	1E+3	6E-7	2E-9	–	–
50	Tin-119m	D, see ^{110}Sn	3E+3	2E+3	1E-6	3E-9	–	–
			LLI wall (4E+3)	–	–	–	6E-5	6E-4
		W, see ^{110}Sn	–	1E+3	4E-7	1E-9	–	–

Footnotes appear at the end of these three tables.

Annual Limits on Intake (ALI) and Derived Air Concentrations (DAC) of Radionuclides for Occupational Exposure
Effluent Concentrations
Concentrations for Release to Sanitary Sewerage *(Continued)*

			Table I Occupational Values			Table II Effluent Concentrations		Table III Releases to Sewers
			Col. 1	Col. 2	Col. 3	Col. 1	Col. 2	
			Oral Ingestion	Inhalation				
Atomic No.	Radionuclide	Class	ALI (μCi)	ALI (μCi)	DAC (μCi/ml)	Air (μCi/ml)	Water (μCi/ml)	Monthly Average Concentration (μCi/ml)
50	Tin-121m	D, see ^{110}Sn	3E+3	9E+2	4E-7	1E-9	–	–
			LLI wall (4E+3)	–	–	–	5E-5	5E-4
		W, see ^{110}Sn	–	5E+2	2E-7	8E-10	–	–
50	Tin-121	D, see ^{110}Sn	6E+3	2E+4	6E-6	2E-8	–	–
			LLI wall (6E+3)	–	–	–	8E-5	8E-4
		W, see ^{110}Sn	–	1E+4	5E-6	2E-8	–	–
50	Tin-123m[b/]	D, see ^{110}Sn	5E+4	1E+5	5E-5	2E-7	7E-4	7E-3
		W, see ^{110}Sn	–	1E+5	6E-5	2E-7	–	–
50	Tin-123	D, see ^{110}Sn	5E+2	6E+2	3E-7	9E-10	–	–
			LLI wall (6E+2)	–	–	–	9E-6	9E-5
		W, see ^{110}Sn	–	2E+2	7E-8	2E-10	–	–
50	Tin-125	D, see ^{110}Sn	4E+2	9E+2	4E-7	1E-9	–	–
			LLI wall (5E+2)	–	–	–	6E-6	6E-5
		W, see ^{110}Sn	–	4E+2	1E-7	5E-10	–	–
50	Tin-126	D, see ^{110}Sn	3E+2	6E+1	2E-8	8E-11	4E-6	4E-5
		W, see ^{110}Sn	–	7E+1	3E-8	9E-11	–	–
50	Tin-127	D, see ^{110}Sn	7E+3	2E+4	8E-6	3E-8	9E-5	9E-4
		W, see ^{110}Sn	–	2E+4	8E-6	3E-8	–	–
50	Tin-128[b/]	D, see ^{110}Sn	9E+3	3E+4	1E-5	4E-8	1E-4	1E-3
		W, see ^{110}Sn	–	4E+4	1E-5	5E-8	–	–
51	Antimony-115[b/]	D, all compounds except those given for W	8E+4	2E+5	1E-4	3E-7	1E-3	1E-2
		W, oxides, hydroxides, halides, sulfides, sulfates, and nitrates	–	3E+5	1E-4	4E-7	–	–
51	Antimony-116m[b/]	D, see ^{115}Sb	2E+4	7E+4	3E-5	1E-7	3E-4	3E-3
		W, see ^{115}Sb	–	1E+5	6E-5	2E-7	–	–
51	Antimony-116[b/]	D, see ^{115}Sb	7E+4	3E+5	1E-4	4E-7	–	–
			St wall (9E+4)	–	–	–	1E-3	1E-2
		W, see ^{115}Sb	–	3E+5	1E-4	5E-7	–	–
51	Antimony-117	D, see ^{115}Sb	7E+4	2E+5	9E-5	3E-7	9E-4	9E-3
		W, see ^{115}Sb	–	3E+5	1E-4	4E-7	–	–
51	Antimony-118m	D, see ^{115}Sb	6E+3	2E+4	8E-6	3E-8	7E-5	7E-4
		W, see ^{115}Sb	5E+3	2E+4	9E-6	3E-8	–	–

Footnotes appear at the end of these three tables.

Annual Limits on Intake (ALI) and Derived Air Concentrations (DAC) of Radionuclides for Occupational Exposure
Effluent Concentrations
Concentrations for Release to Sanitary Sewerage *(Continued)*

			Table I Occupational Values			Table II Effluent Concentrations		Table III Releases to Sewers
			Col. 1	Col. 2	Col. 3	Col. 1	Col. 2	
			Oral Ingestion	Inhalation				Monthly Average
Atomic No.	Radionuclide	Class	ALI (μCi)	ALI (μCi)	DAC (μCi/ml)	Air (μCi/ml)	Water (μCi/ml)	Concentration (μCi/ml)
51	Antimony-119	D, see ^{115}Sb	2E+4	5E+4	2E-5	6E-8	2E-4	2E-3
		W, see ^{115}Sb	2E+4	3E+4	1E-5	4E-8	–	–
51	Antimony-120[b/] (16 min)	D, see ^{115}Sb	1E+5	4E+5	2E-4	6E-7	–	–
			St wall (2E+5)	–	–	–	2E-3	2E-2
		W, see ^{115}Sb	–	5E+5	2E-4	7E-7	–	–
51	Antimony-120 (5.76 d)	D, see ^{115}Sb	1E+3	2E+3	9E-7	3E-9	1E-5	1E-4
		W, see ^{115}Sb	9E+2	1E+3	5E-7	2E-9	–	–
51	Antimony-122	D, see ^{115}Sb	8E+2	2E+3	1E-6	3E-9	–	–
			LLI wall (8E+2)	–	–	–	1E-5	1E-4
		W, see ^{115}Sb	7E+2	1E+3	4E-7	2E-9	–	–
51	Antimony-124m[b/]	D, see ^{115}Sb	3E+5	8E+5	4E-4	1E-6	3E-3	3E-2
		W, see ^{115}Sb	2E+5	6E+5	2E-4	8E-7	–	–
51	Antimony-124	D, see ^{115}Sb	6E+2	9E+2	4E-7	1E-9	7E-6	7E-5
		W, see ^{115}Sb	5E+2	2E+2	1E-7	3E-10	–	–
51	Antimony-125	D, see ^{115}Sb	2E+3	2E+3	1E-6	3E-9	3E-5	3E-4
		W, see ^{115}Sb	–	5E+2	2E-7	7E-10	–	–
51	Antimony-126m[b/]	D, see ^{115}Sb	5E+4	2E+5	8E-5	3E-7	–	–
			St wall (7E+4)	–	–	–	9E-4	9E-3
		W, see ^{115}Sb	–	2E+5	8E-5	3E-7	–	–
51	Antimony-126	D, see ^{115}Sb	6E+2	1E+3	5E-7	2E-9	7E-6	7E-5
		W, see ^{115}Sb	5E+2	5E+2	2E-7	7E-10	–	–
51	Antimony-127	D, see ^{115}Sb	8E+2	2E+3	9E-7	3E-9	–	–
			LLI wall (8E+2)	–	–	–	1E-5	1E-4
		W, see ^{115}Sb	7E+2	9E+2	4E-7	1E-9	–	–
51	Antimony-128[b/] (10.4 min)	D, see ^{115}Sb	8E+4	4E+5	2E-4	5E-7	–	–
			St wall (1E+5)	–	–	–	1E-3	1E-2
		W, see ^{115}Sb	–	4E+5	2E-4	6E-7	–	–
51	Antimony-128 (9.01 h)	D, see ^{115}Sb	1E+3	4E+3	2E-6	6E-9	2E-5	2E-4
		W, see ^{115}Sb	–	3E+3	1E-6	5E-9	–	–
51	Antimony-129	D, see ^{115}Sb	3E+3	9E+3	4E-6	1E-8	4E-5	4E-4
		W, see ^{115}Sb	–	9E+3	4E-6	1E-8	–	–
51	Antimony-130[b/]	D, see ^{115}Sb	2E+4	6E+4	3E-5	9E-8	3E-4	3E-3
		W, see ^{115}Sb	–	8E+4	3E-5	1E-7	–	–

Footnotes appear at the end of these three tables.

Annual Limits on Intake (ALI) and Derived Air Concentrations (DAC) of Radionuclides for Occupational Exposure
Effluent Concentrations
Concentrations for Release to Sanitary Sewerage *(Continued)*

			Table I Occupational Values			Table II Effluent Concentrations		Table III Releases to Sewers
			Col. 1	Col. 2	Col. 3	Col. 1	Col. 2	
			Oral Ingestion	Inhalation				
Atomic No.	Radionuclide	Class	ALI (μCi)	ALI (μCi)	DAC (μCi/ml)	Air (μCi/ml)	Water (μCi/ml)	Monthly Average Concentration (μCi/ml)
51	Antimony-131[b/]	D, see ^{115}Sb	1E+4	2E+4	1E-5	–	–	–
			Thyroid (2E+4)	Thyroid (4E+4)	–	6E-8	2E-4	2E-3
		W, see ^{115}Sb	-	2E+4	1E-5	–	–	–
			-	Thyroid (4E+4)	–	6E-8	–	–
52	Tellurium-116	D, all compounds except those given for W	8E+3	2E+4	9E-6	3E-8	1E-4	1E-3
		W, oxides, hydroxides, and nitrates	-	3E+4	1E-5	4E-8	–	–
52	Tellurium-121m	D, see ^{116}Te	5E+2	2E+2	8E-8	–	–	–
			Bone surf (7E+2)	Bone surf (4E+2)	–	5E-10	1E-5	1E-4
		W, see ^{116}Te	–	4E+2	2E-7	6E-10	–	–
52	Tellurium-121	D, see ^{116}Te	3E+3	4E+3	2E-6	6E-9	4E-5	4E-4
		W, see ^{116}Te	–	3E+3	1E-6	4E-9	–	–
52	Tellurium-123m	D, see ^{116}Te	6E+2	2E+2	9E-8	–	–	–
			Bone surf (1E+3)	Bone surf (5E+2)	–	8E-10	1E-5	1E-4
		W, see ^{116}Te	–	5E+2	2E-7	8E-10	–	–
52	Tellurium-123	D, see ^{116}Te	5E+2	2E+2	8E-8	–	–	–
			Bone surf (1E+3)	Bone surf (5E+2)	–	7E-10	2E-5	2E-4
		W, see ^{116}Te	–	4E+2	2E-7	–	–	–
			–	Bone surf (1E+3)	–	2E-9	–	–
52	Tellurium-125m	D, see ^{116}Te	1E+3	4E+2	2E-7	–	–	–
			Bone surf (1E+3)	Bone surf (1E+3)	–	1E-9	2E-5	2E-4
		W, see ^{116}Te	–	7E+2	3E-7	1E-9	–	–
52	Tellurium-127m	D, see ^{116}Te	6E+2	3E+2	1E-7	–	9E-6	9E-5
			–	Bone surf (4E+2)	–	6E-10	–	–
		W, see ^{116}Te	–	3E+2	1E-7	4E-10	–	–
52	Tellurium-127	D, see ^{116}Te	7E+3	2E+4	9E-6	3E-8	1E-4	1E-3
		W, see ^{116}Te	–	2E+4	7E-6	2E-8	–	–
52	Tellurium-129m	D, see ^{116}Te	5E+2	6E+2	3E-7	9E-10	7E-6	7E-5
		W, see ^{116}Te	–	2E+2	1E-7	3E-10	–	–
52	Tellurium-129[b/]	D, see ^{116}Te	3E+4	6E+4	3E-5	9E-8	4E-4	4E-3
		W, see ^{116}Te	–	7E+4	3E-5	1E-7	–	–

Footnotes appear at the end of these three tables.

Annual Limits on Intake (ALI) and Derived Air Concentrations (DAC) of Radionuclides for Occupational Exposure
Effluent Concentrations
Concentrations for Release to Sanitary Sewerage *(Continued)*

			Table I Occupational Values			Table II Effluent Concentrations		Table III Releases to Sewers
			Col. 1	Col. 2	Col. 3	Col. 1	Col. 2	
			Oral Ingestion	Inhalation				
Atomic No.	Radionuclide	Class	ALI (μCi)	ALI (μCi)	DAC (μCi/ml)	Air (μCi/ml)	Water (μCi/ml)	Monthly Average Concentration (μCi/ml)
52	Tellurium-131m	D, see ^{116}Te	3E+2	4E+2	2E-7	–	–	–
			Thyroid (6E+2)	Thyroid (1E+3)	–	2E-9	8E-6	8E-5
		W, see ^{116}Te	–	4E+2	2E-7	–	–	–
			–	Thyroid (9E+2)	–	1E-9	–	–
52	Tellurium-131[b/]	D, see ^{116}Te	3E+3	5E+3	2E-6	–	–	–
			Thyroid (6E+3)	Thyroid (1E+4)	–	2E-8	8E-5	8E-4
		W, see ^{116}Te	–	5E+3	2E-6	–	–	–
			–	Thyroid (1E+4)	–	2E-8	–	–
52	Tellurium-132	D, see ^{116}Te	2E+2	2E+2	9E-8	–	–	–
			Thyroid (7E+2)	Thyroid (8E+2)	–	1E-9	9E-6	9E-5
		W, see ^{116}Te	–	2E+2	9E-8	–	–	–
			–	Thyroid (6E+2)	–	9E-10	–	–
52	Tellurium-133m[b/]	D, see ^{116}Te	3E+3	5E+3	2E-6	–	–	–
			Thyroid (6E+3)	Thyroid (1E+4)	–	2E-8	9E-5	9E-4
		W, see ^{116}Te	–	5E+3	2E-6	–	–	–
			–	Thyroid (1E+4)	–	2E-8	–	–
52	Tellurium-133[b/]	D, see ^{116}Te	1E+4	2E+4	9E-6	–	–	–
			Thyroid (3E+4)	Thyroid (6E+4)	–	8E-8	4E-4	4E-3
		W, see ^{116}Te	–	2E+4	9E-6	–	–	–
			–	Thyroid (6E+4)	–	8E-8	–	–
52	Tellurium-134[b/]	D, see ^{116}Te	2E+4	2E+4	1E-5	–	–	–
			Thyroid (2E+4)	Thyroid (5E+4)	–	7E-8	3E-4	3E-3
		W, see ^{116}Te	–	2E+4	1E-5	–	–	–
			–	Thyroid (5E+4)	–	7E-8	–	–
53	Iodine-120m[b/]	D, all compounds	1E+4	2E+4	9E-6	3E-8	–	–
			Thyroid (1E+4)	–	–	–	2E-4	2E-3
53	Iodine-120[b/]	D, all compounds	4E+3	9E+3	4E-6	–	–	–
			Thyroid (8E+3)	Thyroid (1E+4)	–	2E-8	1E-4	1E-3

Footnotes appear at the end of these three tables.

Annual Limits on Intake (ALI) and Derived Air Concentrations (DAC) of Radionuclides for Occupational Exposure
Effluent Concentrations
Concentrations for Release to Sanitary Sewerage *(Continued)*

			Table I Occupational Values			Table II Effluent Concentrations		Table III Releases to Sewers
			Col. 1	Col. 2	Col. 3	Col. 1	Col. 2	
			Oral Ingestion	Inhalation				
Atomic No.	Radionuclide	Class	ALI (μCi)	ALI (μCi)	DAC (μCi/ml)	Air (μCi/ml)	Water (μCi/ml)	Monthly Average Concentration (μCi/ml)
53	Iodine-121	D, all compounds	1E+4	2E+4	8E-6	–	–	–
			Thyroid (3E+4)	Thyroid (5E+4)	–	7E-8	4E-4	4E-3
53	Iodine-123	D, all compounds	3E+3	6E+3	3E-6	–	–	–
			Thyroid (1E+4)	Thyroid (2E+4)	–	2E-8	1E-4	1E-3
53	Iodine-124	D, all compounds	5E+1	8E+1	3E-8	–	–	–
			Thyroid (2E+2)	Thyroid (3E+2)	–	4E-10	2E-6	2E-5
53	Iodine-125	D, all compounds	4E+1	6E+1	3E-8	–	–	–
			Thyroid (1E+2)	Thyroid (2E+2)	–	3E-10	2E-6	2E-5
53	Iodine-126	D, all compounds	2E+1	4E+1	1E-8	–	–	–
			Thyroid (7E+1)	Thyroid (1E+2)	–	2E-10	1E-6	1E-5
53	Iodine-128[b/]	D, all compounds	4E+4	1E+5	5E-5	2E-7	–	–
			St wall (6E+4)	–	–	–	8E-4	8E-3
53	Iodine-129	D, all compounds	5E+0	9E+0	4E-9	–	–	–
			Thyroid (2E+1)	Thyroid (3E+1)	–	4E-11	2E-7	2E-6
53	Iodine-130	D, all compounds	4E+2	7E+2	3E-7	–	–	–
			Thyroid (1E+3)	Thyroid (2E+3)	–	3E-9	2E-5	2E-4
53	Iodine-131	D, all compounds	3E+1	5E+1	2E-8	–	–	–
			Thyroid (9E+1)	Thyroid (2E+2)	–	2E-10	1E-6	1E-5
53	Iodine-132m[b/]	D, all compounds	4E+3	8E+3	4E-6	–	–	–
			Thyroid (1E+4)	Thyroid (2E+4)	–	3E-8	1E-4	1E-3
53	Iodine-132	D, all compounds	4E+3	8E+3	3E-6	–	–	–
			Thyroid (9E+3)	Thyroid (1E+4)	–	2E-8	1E-4	1E-3
53	Iodine-133	D, all compounds	1E+2	3E+2	1E-7	–	–	–
			Thyroid (5E+2)	Thyroid (9E+2)	–	1E-9	7E-6	7E-5
53	Iodine-134[b/]	D, all compounds	2E+4	5E+4	2E-5	6E-8	–	–
			Thyroid (3E+4)	–	–	–	4E-4	4E-3

Footnotes appear at the end of these three tables.

Annual Limits on Intake (ALI) and Derived Air Concentrations (DAC) of Radionuclides for Occupational Exposure
Effluent Concentrations
Concentrations for Release to Sanitary Sewerage *(Continued)*

			Table I Occupational Values			Table II Effluent Concentrations		Table III Releases to Sewers
			Col. 1	Col. 2	Col. 3	Col. 1	Col. 2	
			Oral Ingestion	Inhalation				
Atomic No.	Radionuclide	Class	ALI (μCi)	ALI (μCi)	DAC (μCi/ml)	Air (μCi/ml)	Water (μCi/ml)	Monthly Average Concentration (μCi/ml)
53	Iodine-135	D, all compounds	8E+2	2E+3	7E-7	–	–	–
			Thyroid (3E+3)	Thyroid (4E+3)	–	6E-9	3E-5	3E-4
54	Xenon-120[b/]	Submersion[a/]	–	–	1E-5	4E-8	–	–
54	Xenon-121[b/]	Submersion[a/]	–	–	2E-6	1E-8	–	–
54	Xenon-122	Submersion[a/]	–	–	7E-5	3E-7	–	–
54	Xenon-123	Submersion[a/]	–	–	6E-6	3E-8	–	–
54	Xenon-125	Submersion[a/]	–	–	2E-5	7E-8	–	–
54	Xenon-127	Submersion[a/]	–	–	1E-5	6E-8	–	–
54	Xenon-129m	Submersion[a/]	–	–	2E-4	9E-7	–	–
54	Xenon-131m	Submersion[a/]	–	–	4E-4	2E-6	–	–
54	Xenon-133m	Submersion[a/]	–	–	1E-4	6E-7	–	–
54	Xenon-133	Submersion[a/]	–	–	1E-4	5E-7	–	–
54	Xenon-135m[b/]	Submersion[a/]	–	–	9E-6	4E-8	–	–
54	Xenon-135	Submersion[a/]	–	–	1E-5	7E-8	–	–
54	Xenon-138[b/]	Submersion[a/]	–	–	4E-6	2E-8	–	–
55	Cesium-125[b/]	D, all compounds	5E+4	1E+5	6E-5	2E-7	–	–
			St wall (9E+4)	–	–	–	1E-3	1E-2
55	Cesium-127	D, all compounds	6E+4	9E+4	4E-5	1E-7	9E-4	9E-3
55	Cesium-129	D, all compounds	2E+4	3E+4	1E-5	5E-8	3E-4	3E-3
55	Cesium-130[b/]	D, all compounds	6E+4	2E+5	8E-5	3E-7	–	–
			St wall (1E+5)	–	–	–	1E-3	1E-2
55	Cesium-131	D, all compounds	2E+4	3E+4	1E-5	4E-8	3E-4	3E-3
55	Cesium-132	D, all compounds	3E+3	4E+3	2E-6	6E-9	4E-5	4E-4
55	Cesium-134m	D, all compounds	1E+5	1E+5	6E-5	2E-7	–	–
			St wall (1E+5)	–	–	–	2E-3	2E-2
55	Cesium-134	D, all compounds	7E+1	1E+2	4E-8	2E-10	9E-7	9E-6

Footnotes appear at the end of these three tables.

Annual Limits on Intake (ALI) and Derived Air Concentrations (DAC) of Radionuclides for Occupational Exposure
Effluent Concentrations
Concentrations for Release to Sanitary Sewerage *(Continued)*

			Table I Occupational Values			Table II Effluent Concentrations		Table III Releases to Sewers
			Col. 1	Col. 2	Col. 3	Col. 1	Col. 2	
			Oral Ingestion	Inhalation				Monthly Average
Atomic No.	Radionuclide	Class	ALI (μCi)	ALI (μCi)	DAC (μCi/ml)	Air (μCi/ml)	Water (μCi/ml)	Concentration (μCi/ml)
55	Cesium-135m[b/]	D, all compounds	1E+5	2E+5	8E-5	3E-7	1E-3	1E-2
55	Cesium-135	D, all compounds	7E+2	1E+3	5E-7	2E-9	1E-5	1E-4
55	Cesium-136	D, all compounds	4E+2	7E+2	3E-7	9E-10	6E-6	6E-5
55	Cesium-137	D, all compounds	1E+2	2E+2	6E-8	2E-10	1E-6	1E-5
55	Cesium-138[b/]	D, all compounds	2E+4	6E+4	2E-5	8E-8	–	–
			St wall (3E+4)	–	–	–	4E-4	4E-3
56	Barium-126[b/]	D, all compounds	6E+3	2E+4	6E-6	2E-8	8E-5	8E-4
56	Barium-128	D, all compounds	5E+2	2E+3	7E-7	2E-9	7E-6	7E-5
56	Barium-131m[b/]	D, all compounds	4E+5	1E+6	6E-4	2E-6	–	–
			St wall (5E+5)	–	–	–	7E-3	7E-2
56	Barium-131	D, all compounds	3E+3	8E+3	3E-6	1E-8	4E-5	4E-4
56	Barium-133m	D, all compounds	2E+3	9E+3	4E-6	1E-8	–	–
			LLI wall (3E+3)	–	–	–	4E-5	4E-4
56	Barium-133	D, all compounds	2E+3	7E+2	3E-7	9E-10	2E-5	2E-4
56	Barium-135m	D, all compounds	3E+3	1E+4	5E-6	2E-8	4E-5	4E-4
56	Barium-139[b/]	D, all compounds	1E+4	3E+4	1E-5	4E-8	2E-4	2E-3
56	Barium-140	D, all compounds	5E+2	1E+3	6E-7	2E-9	–	–
			LLI wall (6E+2)	–	–	–	8E-6	8E-5
56	Barium-141[b/]	D, all compounds	2E+4	7E+4	3E-5	1E-7	3E-4	3E-3
56	Barium-142[b/]	D, all compounds	5E+4	1E+5	6E-5	2E-7	7E-4	7E-3
57	Lanthanum-131[b/]	D, all compounds except those given for W	5E+4	1E+5	5E-5	2E-7	6E-4	6E-3
		W, oxides and hydroxides	–	2E+5	7E-5	2E-7	–	–
57	Lanthanum-132	D, see ^{131}La	3E+3	1E+4	4E-6	1E-8	4E-5	4E-4
		W, see ^{131}La	–	1E+4	5E-6	2E-8	–	–
57	Lanthanum-135	D, see ^{131}La	4E+4	1E+5	4E-5	1E-7	5E-4	5E-3
		W, see ^{131}La	–	9E+4	4E-5	1E-7	–	–

Footnotes appear at the end of these three tables.

Annual Limits on Intake (ALI) and Derived Air Concentrations (DAC) of Radionuclides for Occupational Exposure
Effluent Concentrations
Concentrations for Release to Sanitary Sewerage *(Continued)*

			Table I Occupational Values			Table II Effluent Concentrations		Table III Releases to Sewers
			Col. 1	Col. 2	Col. 3	Col. 1	Col. 2	
			Oral Ingestion	Inhalation				
Atomic No.	Radionuclide	Class	ALI (μCi)	ALI (μCi)	DAC (μCi/ml)	Air (μCi/ml)	Water (μCi/ml)	Monthly Average Concentration (μCi/ml)
57	Lanthanum-137	D, see ^{131}La	1E+4	6E+1	3E-8	–	2E-4	2E-3
			–	Liver (7E+1)	–	1E-10	–	–
		W, see ^{131}La	–	3E+2	1E-7	–	–	–
			–	Liver (3E+2)	–	4E-10	–	–
57	Lanthanum-138	D, see ^{131}La	9E+2	4E+0	1E-9	5E-12	1E-5	1E-4
		W, see ^{131}La	–	1E+1	6E-9	2E-11	–	–
57	Lanthanum-140	D, see ^{131}La	6E+2	1E+3	6E-7	2E-9	9E-6	9E-5
		W, see ^{131}La	–	1E+3	5E-7	2E-9	–	–
57	Lanthanum-141	D, see ^{131}La	4E+3	9E+3	4E-6	1E-8	5E-5	5E-4
		W, see ^{131}La	–	1E+4	5E-6	2E-8	–	–
57	Lanthanum-142[b/]	D, see ^{131}La	8E+3	2E+4	9E-6	3E-8	1E-4	1E-3
		W, see ^{131}La	–	3E+4	1E-5	5E-8	–	–
57	Lanthanum-143[b/]	D, see ^{131}La	4E+4	1E+5	4E-5	1E-7	–	–
			St wall (4E+4)	–	–	–	5E-4	5E-3
		W, see ^{131}La	–	9E+4	4E-5	1E-7	–	–
58	Cerium-134	W, all compounds except those given for Y	5E+2	7E+2	3E-7	1E-9	–	–
			LLI wall (6E+2)	–	–	–	8E-6	8E-5
		Y, oxides, hydroxides, and fluorides	–	7E+2	3E-7	9E-10	–	–
58	Cerium-135	W, see ^{134}Ce	2E+3	4E+3	2E-6	5E-9	2E-5	2E-4
		Y, see ^{134}Ce	–	4E+3	1E-6	5E-9	–	–
58	Cerium-137m	W, see ^{134}Ce	2E+3	4E+3	2E-6	6E-9	–	–
			LLI wall (2E+3)	–	–	–	3E-5	3E-4
		Y, see ^{134}Ce	–	4E+3	2E-6	5E-9	–	–
58	Cerium-137	W, see ^{134}Ce	5E+4	1E+5	6E-5	2E-7	7E-4	7E-3
		Y, see ^{134}Ce	–	1E+5	5E-5	2E-7	–	–
58	Cerium-139	W, see ^{134}Ce	5E+3	8E+2	3E-7	1E-9	7E-5	7E-4
		Y, see ^{134}Ce	–	7E+2	3E-7	9E-10	–	–
58	Cerium-141	W, see ^{134}Ce	2E+3	7E+2	3E-7	1E-9	–	–
			LLI wall (2E+3)	–	–	–	3E-5	3E-4
		Y, see ^{134}Ce	–	6E+2	2E-7	8E-10	–	–

Footnotes appear at the end of these three tables.

Annual Limits on Intake (ALI) and Derived Air Concentrations (DAC) of Radionuclides for Occupational Exposure
Effluent Concentrations
Concentrations for Release to Sanitary Sewerage *(Continued)*

			Table I Occupational Values			Table II Effluent Concentrations		Table III Releases to Sewers
			Col. 1	Col. 2	Col. 3	Col. 1	Col. 2	
			Oral Ingestion	Inhalation				
Atomic No.	Radionuclide	Class	ALI (μCi)	ALI (μCi)	DAC (μCi/ml)	Air (μCi/ml)	Water (μCi/ml)	Monthly Average Concentration (μCi/ml)
58	Cerium-143	W, see ^{134}Ce	1E+3	2E+3	8E-7	3E-9	–	–
			LLI wall (1E+3)	–	–	–	2E-5	2E-4
		Y, see ^{134}Ce	–	2E+3	7E-7	2E-9	–	–
58	Cerium-144	W, see ^{134}Ce	2E+2	3E+1	1E-8	4E-11	–	–
			LLI wall (3E+2)	–	–	–	3E-6	3E-5
		Y, see ^{134}Ce	–	1E+1	6E-9	2E-11	–	–
59	Praseodymium-136[b/]	W, all compounds except those given for Y	5E+4	2E+5	1E-4	3E-7	–	–
			St wall (7E+4)	–	–	–	1E-3	1E-2
		Y, oxides, hydroxides, carbides, and fluorides	–	2E+5	9E-5	3E-7	–	–
59	Praseodymium-137[b/]	W, see ^{136}Pr	4E+4	2E+5	6E-5	2E-7	5E-4	5E-3
		Y, see ^{136}Pr	–	1E+5	6E-5	2E-7	–	–
59	Praseodymium-138m	W, see ^{136}Pr	1E+4	5E+4	2E-5	8E-8	1E-4	1E-3
		Y, see ^{136}Pr	–	4E+4	2E-5	6E-8	–	–
59	Praseodymium-139	W, see ^{136}Pr	4E+4	1E+5	5E-5	2E-7	6E-4	6E-3
		Y, see ^{136}Pr	–	1E+5	5E-5	2E-7	–	–
59	Praseodymium-142m[b/]	W, see ^{136}Pr	8E+4	2E+5	7E-5	2E-7	1E-3	1E-2
		Y, see ^{136}Pr	–	1E+5	6E-5	2E-7	–	–
59	Praseodymium-142	W, see ^{136}Pr	1E+3	2E+3	9E-7	3E-9	1E-5	1E-4
		Y, see ^{136}Pr	–	2E+3	8E-7	3E-9	–	–
59	Praseodymium-143	W, see ^{136}Pr	9E+2	8E+2	3E-7	1E-9	–	–
			LLI wall (1E+3)	–	–	–	2E-5	2E-4
		Y, see ^{136}Pr	–	7E+2	3E-7	9E-10	–	–
59	Praseodymium-144[b/]	W, see ^{136}Pr	3E+4	1E+5	5E-5	2E-7	–	–
			St wall (4E+4)	–	–	–	6E-4	6E-3
		Y, see ^{136}Pr	–	1E+5	5E-5	2E-7	–	–
59	Praseodymium-145	W, see ^{136}Pr	3E+3	9E+3	4E-6	1E-8	4E-5	4E-4
		Y, see ^{136}Pr	–	8E+3	3E-6	1E-8	–	–
59	Praseodymium-147[b/]	W, see ^{136}Pr	5E+4	2E+5	8E-5	3E-7	–	–
			St wall (8E+4)	–	–	–	1E-3	1E-2
		Y, see ^{136}Pr	–	2E+5	8E-5	3E-7	–	–

Footnotes appear at the end of these three tables.

Annual Limits on Intake (ALI) and Derived Air Concentrations (DAC) of Radionuclides for Occupational Exposure
Effluent Concentrations
Concentrations for Release to Sanitary Sewerage *(Continued)*

			Table I Occupational Values			Table II Effluent Concentrations		Table III Releases to Sewers
			Col. 1	Col. 2	Col. 3	Col. 1	Col. 2	
			Oral Ingestion	Inhalation				
Atomic No.	Radionuclide	Class	ALI (μCi)	ALI (μCi)	DAC (μCi/ml)	Air (μCi/ml)	Water (μCi/ml)	Monthly Average Concentration (μCi/ml)
60	Neodymium-136[b/]	W, all compounds except those given for Y	1E+4	6E+4	2E-5	8E-8	2E-4	2E-3
		Y, oxides, hydroxides, carbides, and fluorides	–	5E+4	2E-5	8E-8	–	–
60	Neodymium-138	W, see ^{136}Nd	2E+3	6E+3	3E-6	9E-9	3E-5	3E-4
		Y, see ^{136}Nd	-	5E+3	2E-6	7E-9	-	-
60	Neodymium-139m	W, see ^{136}Nd	5E+3	2E+4	7E-6	2E-8	7E-5	7E-4
		Y, see ^{136}Nd	–	1E+4	6E-6	2E-8	–	–
60	Neodymium-139[b/]	W, see ^{136}Nd	9E+4	3E+5	1E-4	5E-7	1E-3	1E-2
		Y, see ^{136}Nd	–	3E+5	1E-4	4E-7	–	–
60	Neodymium-141	W, see ^{136}Nd	2E+5	7E+5	3E-4	1E-6	2E-3	2E-2
		Y, see ^{136}Nd	–	6E+5	3E-4	9E-7	–	–
60	Neodymium-147	W, see ^{136}Nd	1E+3	9E+2	4E-7	1E-9	–	–
			LLI wall (1E+3)	–	–	–	2E-5	2E-4
		Y, see ^{136}Nd	–	8E+2	4E-7	1E-9	–	–
60	Neodymium-149[b/]	W, see ^{136}Nd	1E+4	3E+4	1E-5	4E-8	1E-4	1E-3
		Y, see ^{136}Nd	–	2E+4	1E-5	3E-8	–	–
60	Neodymium-151[b/]	W, see ^{136}Nd	7E+4	2E+5	8E-5	3E-7	9E-4	9E-3
		Y, see ^{136}Nd	–	2E+5	8E-5	3E-7	–	–
61	Promethium-141[b/]	W, all compounds except those given for Y	5E+4	2E+5	8E-5	3E-7	–	–
			St wall (6E+4)	–	–	–	8E-4	8E-3
		Y, oxides, hydroxides, carbides, and fluorides	–	2E+5	7E-5	2E-7	–	–
61	Promethium-143	W, see ^{141}Pm	5E+3	6E+2	2E-7	8E-10	7E-5	7E-4
		Y, see ^{141}Pm	–	7E+2	3E-7	1E-9	–	–
61	Promethium-144	W, see ^{141}Pm	1E+3	1E+2	5E-8	2E-10	2E-5	2E-4
		Y, see ^{141}Pm	–	1E+2	5E-8	2E-10	–	–
61	Promethium-145	W, see ^{141}Pm	1E+4	2E+2	7E-8	–	1E-4	1E-3
			–	Bone surf (2E+2)	–	3E-10	–	–
		Y, see ^{141}Pm	–	2E+2	8E-8	3E-10	–	–
61	Promethium-146	W, see ^{141}Pm	2E+3	5E+1	2E-8	7E-11	2E-5	2E-4
		Y, see ^{141}Pm	–	4E+1	2E-8	6E-11	–	–

Footnotes appear at the end of these three tables.

Annual Limits on Intake (ALI) and Derived Air Concentrations (DAC) of Radionuclides for Occupational Exposure
Effluent Concentrations
Concentrations for Release to Sanitary Sewerage *(Continued)*

			Table I Occupational Values			Table II Effluent Concentrations		Table III Releases to Sewers
			Col. 1	Col. 2	Col. 3	Col. 1	Col. 2	
			Oral Ingestion	Inhalation				
Atomic No.	Radionuclide	Class	ALI (μCi)	ALI (μCi)	DAC (μCi/ml)	Air (μCi/ml)	Water (μCi/ml)	Monthly Average Concentration (μCi/ml)
61	Promethium-147	W, see ^{141}Pm	4E+3	1E+2	5E-8	–	–	–
			LLI wall (5E+3)	Bone surf (2E+2)	–	3E-10	7E-5	7E-4
		Y, see ^{141}Pm	–	1E+2	6E-8	2E-10	–	–
61	Promethium-148m	W, see ^{141}Pm	7E+2	3E+2	1E-7	4E-10	1E-5	1E-4
		Y, see ^{141}Pm	–	3E+2	1E-7	5E-10	–	–
61	Promethium-148	W, see ^{141}Pm	4E+2	5E+2	2E-7	8E-10	–	–
			LLI wall (5E+2)	–	–	–	7E-6	7E-5
		Y, see ^{141}Pm	–	5E+2	2E-7	7E-10	–	–
61	Promethium-149	W, see ^{141}Pm	1E+3	2E+3	8E-7	3E-9	–	–
			LLI wall (1E+3)	–	–	–	2E-5	2E-4
		Y, see ^{141}Pm	–	2E+3	8E-7	2E-9	–	–
61	Promethium-150	W, see ^{141}Pm	5E+3	2E+4	8E-6	3E-8	7E-5	7E-4
		Y, see ^{141}Pm	–	2E+4	7E-6	2E-8	–	–
61	Promethium-151	W, see ^{141}Pm	2E+3	4E+3	1E-6	5E-9	2E-5	2E-4
		Y, see ^{141}Pm	–	3E+3	1E-6	4E-9	–	–
62	Samarium-141m[b/]	W, all compounds	3E+4	1E+5	4E-5	1E-7	4E-4	4E-3
62	Samarium-141[b/]	W, all compounds	5E+4	2E+5	8E-5	2E-7	–	–
			St wall (6E+4)	–	–	–	8E-4	8E-3
62	Samarium-142[b/]	W, all compounds	8E+3	3E+4	1E-5	4E-8	1E-4	1E-3
62	Samarium-145	W, all compounds	6E+3	5E+2	2E-7	7E-10	8E-5	8E-4
62	Samarium-146	W, all compounds	1E+1	4E-2	1E-11	–	–	–
			Bone surf (3E+1)	Bone surf (6E-2)	–	9E-14	3E-7	3E-6
62	Samarium-147	W, all compounds	2E+1	4E-2	2E-11	–	–	–
			Bone surf (3E+1)	Bone surf (7E-2)	–	1E-13	4E-7	4E-6
62	Samarium-151	W, all compounds	1E+4	1E+2	4E-8	–	–	–
			LLI wall (1E+4)	Bone surf (2E+2)	–	2E-10	2E-4	2E-3
62	Samarium-153	W, all compounds	2E+3	3E+3	1E-6	4E-9	–	–
			LLI wall (2E+3)	–	–	–	3E-5	3E-4

Footnotes appear at the end of these three tables.

Annual Limits on Intake (ALI) and Derived Air Concentrations (DAC) of Radionuclides for Occupational Exposure
Effluent Concentrations
Concentrations for Release to Sanitary Sewerage *(Continued)*

			Table I Occupational Values			Table II Effluent Concentrations		Table III Releases to Sewers
			Col. 1	Col. 2	Col. 3	Col. 1	Col. 2	
			Oral Ingestion	Inhalation				
Atomic No.	Radionuclide	Class	ALI (μCi)	ALI (μCi)	DAC (μCi/ml)	Air (μCi/ml)	Water (μCi/ml)	Monthly Average Concentration (μCi/ml)
62	Samarium-155[b/]	W, all compounds	6E+4	2E+5	9E-5	3E-7	–	–
			St wall (8E+4)	–	–	–	1E-3	1E-2
62	Samarium-156	W, all compounds	5E+3	9E+3	4E-6	1E-8	7E-5	7E-4
63	Europium-145	W, all compounds	2E+3	2E+3	8E-7	3E-9	2E-5	2E-4
63	Europium-146	W, all compounds	1E+3	1E+3	5E-7	2E-9	1E-5	1E-4
63	Europium-147	W, all compounds	3E+3	2E+3	7E-7	2E-9	4E-5	4E-4
63	Europium-148	W, all compounds	1E+3	4E+2	1E-7	5E-10	1E-5	1E-4
63	Europium-149	W, all compounds	1E+4	3E+3	1E-6	4E-9	2E-4	2E-3
63	Europium-150 (12.62 h)	W, all compounds	3E+3	8E+3	4E-6	1E-8	4E-5	4E-4
63	Europium-150 (34.2 y)	W, all compounds	8E+2	2E+1	8E-9	3E-11	1E-5	1E-4
63	Europium-152m	W, all compounds	3E+3	6E+3	3E-6	9E-9	4E-5	4E-4
63	Europium-152	W, all compounds	8E+2	2E+1	1E-8	3E-11	1E-5	1E-4
63	Europium-154	W, all compounds	5E+2	2E+1	8E-9	3E-11	7E-6	7E-5
63	Europium-155	W, all compounds	4E+3	9E+1	4E-8	–	5E-5	5E-4
			–	Bone surf (1E+2)	–	2E-10	–	–
63	Europium-156	W, all compounds	6E+2	5E+2	2E-7	6E-10	8E-6	8E-5
63	Europium-157	W, all compounds	2E+3	5E+3	2E-6	7E-9	3E-5	3E-4
63	Europium-158[b/]	W, all compounds	2E+4	6E+4	2E-5	8E-8	3E-4	3E-3
64	Gadolinium-145[b/]	D, all compounds except those given for W	5E+4	2E+5	6E-5	2E-7	–	–
			St wall (5E+4)	–	–	–	6E-4	6E-3
		W, oxides, hydroxides, and fluorides	–	2E+5	7E-5	2E-7	–	–
64	Gadolinium-146	D, see ^{145}Gd	1E+3	1E+2	5E-8	2E-10	2E-5	2E-4
		W, see ^{145}Gd	–	3E+2	1E-7	4E-10	–	–
64	Gadolinium-147	D, see ^{145}Gd	2E+3	4E+3	2E-6	6E-9	3E-5	3E-4
		W, see ^{145}Gd	–	4E+3	1E-6	5E-9	–	–

Footnotes appear at the end of these three tables.

Annual Limits on Intake (ALI) and Derived Air Concentrations (DAC) of Radionuclides for Occupational Exposure
Effluent Concentrations
Concentrations for Release to Sanitary Sewerage *(Continued)*

			Table I Occupational Values			Table II Effluent Concentrations		Table III Releases to Sewers
			Col. 1	Col. 2	Col. 3	Col. 1	Col. 2	
			Oral Ingestion	Inhalation				
Atomic No.	Radionuclide	Class	ALI (μCi)	ALI (μCi)	DAC (μCi/ml)	Air (μCi/ml)	Water (μCi/ml)	Monthly Average Concentration (μCi/ml)
64	Gadolinium-148	D, see ^{145}Gd	1E+1	8E+3	3E-12	–	–	–
			Bone surf (2E+1)	Bone surf (2E-2)	–	2E-14	3E-7	3E-6
		W, see ^{145}Gd	–	3E-2	1E-11	–	–	–
			–	Bone surf (6E-2)	–	8E-14	–	–
64	Gadolinium-149	D, see ^{145}Gd	3E+3	2E+3	9E-7	3E-9	4E-5	4E-4
		W, see ^{145}Gd	–	2E+3	1E-6	3E-9	–	–
64	Gadolinium-151	D, see ^{145}Gd	6E+3	4E+2	2E-7	–	9E-5	9E-4
			–	Bone surf (6E+2)	–	9E-10	–	–
		W, see ^{145}Gd	–	1E+3	5E-7	2E-9	–	–
64	Gadolinium-152	D, see ^{145}Gd	2E+1	1E-2	4E-12	–	–	–
			Bone surf (3E+1)	Bone surf (2E-2)	–	3E-14	4E-7	4E-6
		W, see ^{145}Gd	–	4E-2	2E-11	–	–	–
			–	Bone surf (8E-2)	–	1E-13	–	–
64	Gadolinium-153	D, see ^{145}Gd	5E+3	1E+2	6E-8	–	6E-5	6E-4
			–	Bone surf (2E+2)	–	3E-10	–	–
		W, see ^{145}Gd	–	6E+2	2E-7	8E-10	–	–
64	Gadolinium-159	D, see ^{145}Gd	3E+3	8E+3	3E-6	1E-8	4E-5	4E-4
		W, see ^{145}Gd	–	6E+3	2E-6	8E-9	–	–
65	Terbium-147[b/]	W, all compounds	9E+3	3E+4	1E-5	5E-8	1E-4	1E-3
65	Terbium-149	W, all compounds	5E+3	7E+2	3E-7	1E-9	7E-5	7E-4
65	Terbium-150	W, all compounds	5E+3	2E+4	9E-6	3E-8	7E-5	7E-4
65	Terbium-151	W, all compounds	4E+3	9E+3	4E-6	1E-8	5E-5	5E-4
65	Terbium-153	W, all compounds	5E+3	7E+3	3E-6	1E-8	7E-5	7E-4
65	Terbium-154	W, all compounds	2E+3	4E+3	2E-6	6E-9	2E-5	2E-4
65	Terbium-155	W, all compounds	6E+3	8E+3	3E-6	1E-8	8E-5	8E-4
65	Terbium-156m (5.0 h)	W, all compounds	2E+4	3E+4	1E-5	4E-8	2E-4	2E-3
65	Terbium-156m (24.4 h)	W, all compounds	7E+3	8E+3	3E-6	1E-8	1E-4	1E-3
65	Terbium-156	W, all compounds	1E+3	1E+3	6E-7	2E-9	1E-5	1E-4

Footnotes appear at the end of these three tables.

Annual Limits on Intake (ALI) and Derived Air Concentrations (DAC) of Radionuclides for Occupational Exposure
Effluent Concentrations
Concentrations for Release to Sanitary Sewerage *(Continued)*

			Table I Occupational Values			Table II Effluent Concentrations		Table III Releases to Sewers
			Col. 1	Col. 2	Col. 3	Col. 1	Col. 2	
			Oral Ingestion	Inhalation				
Atomic No.	Radionuclide	Class	ALI (μCi)	ALI (μCi)	DAC (μCi/ml)	Air (μCi/ml)	Water (μCi/ml)	Monthly Average Concentration (μCi/ml)
65	Terbium-157	W, all compounds	5E+4	3E+2	1E-7	–	–	–
			LLI wall (5E+4)	Bone surf (6E+2)	–	8E-10	7E-4	7E-3
65	Terbium-158	W, all compounds	1E+3	2E+1	8E-9	3E-11	2E-5	2E-4
65	Terbium-160	W, all compounds	8E+2	2E+2	9E-8	3E-10	1E-5	1E-4
65	Terbium-161	W, all compounds	2E+3	2E+3	7E-7	2E-9	–	–
			LLI wall (2E+3)	–	–	–	3E-5	3E-4
66	Dysprosium-155	W, all compounds	9E+3	3E+4	1E-5	4E-8	1E-4	1E-3
66	Dysprosium-157	W, all compounds	2E+4	6E+4	3E-5	9E-8	3E-4	3E-3
66	Dysprosium-159	W, all compounds	1E+4	2E+3	1E-6	3E-9	2E-4	2E-3
66	Dysprosium-165	W, all compounds	1E+4	5E+4	2E-5	6E-8	2E-4	2E-3
66	Dysprosium-166	W, all compounds	6E+2	7E+2	3E-7	1E-9	–	–
			LLI wall (8E+2)	–	–	–	1E-5	1E-4
67	Holmium-155[b/]	W, all compounds	4E+4	2E+5	6E-5	2E-7	6E-4	6E-3
67	Holmium-157[b/]	W, all compounds	3E+5	1E+6	6E-4	2E-6	4E-3	4E-2
67	Holmium-159[b/]	W, all compounds	2E+5	1E+6	4E-4	1E-6	3E-3	3E-2
67	Holmium-161	W, all compounds	1E+5	4E+5	2E-4	6E-7	1E-3	1E-2
67	Holmium-162m[b/]	W, all compounds	5E+4	3E+5	1E-4	4E-7	7E-4	7E-3
67	Holmium-162[b/]	W, all compounds	5E+5	2E+6	1E-3	3E-6	–	–
			St wall (8E+5)	–	–	–	1E-2	1E-1
67	Holmium-164m[b/]	W, all compounds	1E+5	3E+5	1E-4	4E-7	1E-3	1E-2
67	Holmium-164[b/]	W, all compounds	2E+5	6E+5	3E-4	9E-7	–	–
			St wall (2E+5)	–	–	–	3E-3	3E-2
67	Holmium-166m	W, all compounds	6E+2	7E+0	3E-9	9E-12	9E-6	9E-5
67	Holmium-166	W, all compounds	9E+2	2E+3	7E-7	2E-9	–	–
			LLI wall (9E+2)	–	–	–	1E-5	1E-4
67	Holmium-167	W, all compounds	2E+4	6E+4	2E-5	8E-8	2E-4	2E-3

Footnotes appear at the end of these three tables.

Annual Limits on Intake (ALI) and Derived Air Concentrations (DAC) of Radionuclides for Occupational Exposure
Effluent Concentrations
Concentrations for Release to Sanitary Sewerage *(Continued)*

			Table I Occupational Values			Table II Effluent Concentrations		Table III Releases to Sewers
			Col. 1	Col. 2	Col. 3	Col. 1	Col. 2	
			Oral Ingestion	Inhalation				
Atomic No.	Radionuclide	Class	ALI (μCi)	ALI (μCi)	DAC (μCi/ml)	Air (μCi/ml)	Water (μCi/ml)	Monthly Average Concentration (μCi/ml)
68	Erbium-161	W, all compounds	2E+4	6E+4	3E-5	9E-8	2E-4	2E-3
68	Erbium-165	W, all compounds	6E+4	2E+5	8E-5	3E-7	9E-4	9E-3
68	Erbium-169	W, all compounds	3E+3	3E+3	1E-6	4E-9	–	-
			LLI wall (4E+3)	–	–	–	5E-5	5E-4
68	Erbium-171	W, all compounds	4E+3	1E+4	4E-6	1E-8	5E-5	5E-4
68	Erbium-172	W, all compounds	1E+3	1E+3	6E-7	2E-9	–	-
			LLI wall (1E+3)	–	–	–	2E-5	2E-4
69	Thulium-162[b/]	W, all compounds	7E+4	3E+5	1E-4	4E-7	–	-
			St wall (7E+4)	–	–	–	1E-3	1E-2
69	Thulium-166	W, all compounds	4E+3	1E+4	6E-6	2E-8	6E-5	6E-4
69	Thulium-167	W, all compounds	2E+3	2E+3	8E-7	3E-9	–	-
			LLI wall (2E+3)	–	–	–	3E-5	3E-4
69	Thulium-170	W, all compounds	8E+2	2E+2	9E-8	3E-10	–	-
			LLI wall (1E+3)	–	–	–	1E-5	1E-4
69	Thulium-171	W, all compounds	1E+4	3E+2	1E-7	–	–	-
			LLI wall (1E+4)	Bone surf (6E+2)	–	8E-10	2E-4	2E-3
69	Thulium-172	W, all compounds	7E+2	1E+3	5E-7	2E-9	–	-
			LLI wall (8E+2)	–	–	–	1E-5	1E-4
69	Thulium-173	W, all compounds	4E+3	1E+4	5E-6	2E-8	6E-5	6E-4
69	Thulium-175[b/]	W, all compounds	7E+4	3E+5	1E-4	4E-7	–	-
			St wall (9E+4)	–	–	–	1E-3	1E-2
70	Ytterbium-162[b/]	W, all compounds except those given for Y	7E+4	3E+5	1E-4	4E-7	1E-3	1E-2
		Y, oxides, hydroxides, and fluorides	–	3E+5	1E-4	4E-7	–	-
70	Ytterbium-166	W, see ^{162}Yb	1E+3	2E+3	8E-7	3E-9	2E-5	2E-4
		Y, see ^{162}Yb	–	2E+3	8E-7	3E-9	–	-

Footnotes appear at the end of these three tables.

Annual Limits on Intake (ALI) and Derived Air Concentrations (DAC) of Radionuclides for Occupational Exposure
Effluent Concentrations
Concentrations for Release to Sanitary Sewerage *(Continued)*

			Table I Occupational Values			Table II Effluent Concentrations		Table III Releases to Sewers
			Col. 1	Col. 2	Col. 3	Col. 1	Col. 2	
			Oral Ingestion	Inhalation				
Atomic No.	Radionuclide	Class	ALI (μCi)	ALI (μCi)	DAC (μCi/ml)	Air (μCi/ml)	Water (μCi/ml)	Monthly Average Concentration (μCi/ml)
70	Ytterbium-167[b/]	W, see ^{162}Yb	3E+5	8E+5	3E-4	1E-6	4E-3	4E-2
		Y, see ^{162}Yb	–	7E+5	3E-4	1E-6	–	–
70	Ytterbium-169	W, see ^{162}Yb	2E+3	8E+2	4E-7	1E-9	2E-5	2E-4
		Y, see ^{162}Yb	–	7E+2	3E-7	1E-9	–	–
70	Ytterbium-175	W, see ^{162}Yb	3E+3	4E+3	1E-6	5E-9	–	–
			LLI wall (3E+3)	–	–	–	4E-5	4E-4
		Y, see ^{162}Yb	–	3E+3	1E-6	5E-9	–	–
70	Ytterbium-177[b/]	W, see ^{162}Yb	2E+4	5E+4	2E-5	7E-8	2E-4	2E-3
		Y, see ^{162}Yb	–	5E+4	2E-5	6E-8	–	–
70	Ytterbium-178[b/]	W, see ^{162}Yb	1E+4	4E+4	2E-5	6E-8	2E-4	2E-3
		Y, see ^{162}Yb	–	4E+4	2E-5	5E-8	–	–
71	Lutetium-169	W, all compounds except those given for Y	3E+3	4E+3	2E-6	6E-9	3E-5	3E-4
		Y, oxides, hydroxides, and fluorides	–	4E+3	2E-6	6E-9	–	–
71	Lutetium-170	W, see ^{169}Lu	1E+3	2E+3	9E-7	3E-9	2E-5	2E-4
		Y, see ^{169}Lu	–	2E+3	8E-7	3E-9	–	–
71	Lutetium-171	W, see ^{169}Lu	2E+3	2E+3	8E-7	3E-9	3E-5	3E-4
		Y, see ^{169}Lu	–	2E+3	8E-7	3E-9	–	–
71	Lutetium-172	W, see ^{169}Lu	1E+3	1E+3	5E-7	2E-9	1E-5	1E-4
		Y, see ^{169}Lu	–	1E+3	5E-7	2E-9	–	–
71	Lutetium-173	W, see ^{169}Lu	5E+3	3E+2	1E-7	–	7E-5	7E-4
			–	Bone surf (5E+2)	-	6E-10	–	–
		Y, see ^{169}Lu	–	3E+2	1E-7	4E-10	–	–
71	Lutetium-174m	W, see ^{169}Lu	2E+3	2E+2	1E-7	–	–	–
			LLI wall (3E+3)	Bone surf (3E+2)	–	5E-10	4E-5	4E-4
		Y, see ^{169}Lu	–	2E+2	9E-8	3E-10	–	–
71	Lutetium-174	W, see ^{169}Lu	5E+3	1E+2	5E-8	–	7E-5	7E-4
			–	Bone surf (2E+2)	–	3E-10	–	–
		Y, see ^{169}Lu	–	2E+2	6E-8	2E-10	–	–
71	Lutetium-176m	W, see ^{169}Lu	8E+3	3E+4	1E-5	3E-8	1E-4	1E-3
		Y, see ^{169}Lu	–	2E+4	9E-6	3E-8	–	–

Footnotes appear at the end of these three tables.

Annual Limits on Intake (ALI) and Derived Air Concentrations (DAC) of Radionuclides for Occupational Exposure
Effluent Concentrations
Concentrations for Release to Sanitary Sewerage *(Continued)*

			Table I Occupational Values			Table II Effluent Concentrations		Table III Releases to Sewers
			Col. 1	Col. 2	Col. 3	Col. 1	Col. 2	
			Oral Ingestion	Inhalation				
Atomic No.	Radionuclide	Class	ALI (μCi)	ALI (μCi)	DAC (μCi/ml)	Air (μCi/ml)	Water (μCi/ml)	Monthly Average Concentration (μCi/ml)
71	Lutetium-176	W, see ^{169}Lu	7E+2	5E+0	2E-9	–	1E-5	1E-4
			–	Bone surf (1E+1)	–	2E-11	–	–
		Y, see ^{169}Lu	–	8E+0	3E-9	1E-11	–	–
71	Lutetium-177m	W, see ^{169}Lu	7E+2	1E+2	5E-8	–	1E-5	1E-4
			–	Bone surf (1E+2)	–	2E-10	–	–
		Y, see ^{169}Lu	–	8E+1	3E-8	1E-10	–	–
71	Lutetium-177	W, see ^{169}Lu	2E+3	2E+3	9E-7	3E-9	–	–
			LLI wall (3E+3)	–	–	–	4E-5	4E-4
		Y, see ^{169}Lu	–	2E+3	9E-7	3E-9	–	–
71	Lutetium-178m[b/]	W, see ^{169}Lu	5E+4	2E+5	8E-5	3E-7	–	–
			St wall (6E+4)	–	–	–	8E-4	8E-3
		Y, see ^{169}Lu	–	2E+5	7E-5	2E-7	–	–
71	Lutetium-178[b/]	W, see ^{169}Lu	4E+4	1E+5	5E-5	2E-7	–	–
			St wall (4E+4)	–	–	–	6E-4	6E-3
		Y, see ^{169}Lu	–	1E+5	5E-5	2E-7	–	–
71	Lutetium-179	W, see ^{169}Lu	6E+3	2E+4	8E-6	3E-8	9E-5	9E-4
		Y, see ^{169}Lu	–	2E+4	6E-6	3E-8	–	–
72	Hafnium-170	D, all compounds except those given for W	3E+3	6E+3	2E-6	8E-9	4E-5	4E-4
		W, oxides, hydroxides, carbides, and nitrates	–	5E+3	2E-6	6E-9	–	–
72	Hafnium-172	D, see ^{170}Hf	1E+3	9E+0	4E-9	–	2E-5	2E-4
			–	Bone surf (2E+1)	–	3E-11	–	–
		W, see ^{170}Hf	–	4E+1	2E-8	–	–	–
			–	Bone surf (6E+1)	–	8E-11	–	–
72	Hafnium-173	D, see ^{170}Hf	5E+3	1E+4	5E-6	2E-8	7E-5	7E-4
		W, see ^{170}Hf	–	1E+4	5E-6	2E-8	–	–
72	Hafnium-175	D, see ^{170}Hf	3E+3	9E+2	4E-7	–	4E-5	4E-4
			–	Bone surf (1E+3)	–	1E-9	–	–
		W, see ^{170}Hf	–	1E+3	5E-7	2E-9	–	–
72	Hafnium-177m[b/]	D, see ^{170}Hf	2E+4	6E+4	2E-5	8E-8	3E-4	3E-3
		W, see ^{170}Hf	–	9E+4	4E-5	1E-7	–	–

Footnotes appear at the end of these three tables.

Annual Limits on Intake (ALI) and Derived Air Concentrations (DAC) of Radionuclides for Occupational Exposure
Effluent Concentrations
Concentrations for Release to Sanitary Sewerage *(Continued)*

			Table I Occupational Values			Table II Effluent Concentrations		Table III Releases to Sewers
			Col. 1	Col. 2	Col. 3	Col. 1	Col. 2	
			Oral Ingestion	Inhalation				
Atomic No.	Radionuclide	Class	ALI (μCi)	ALI (μCi)	DAC (μCi/ml)	Air (μCi/ml)	Water (μCi/ml)	Monthly Average Concentration (μCi/ml)
72	Hafnium-178m	D, see ^{170}Hf	3E+2	1E+0	5E-10	–	3E-6	3E-5
			–	Bone surf (2E+0)	–	3E-12	–	–
		W, see ^{170}Hf	–	5E+0	2E-9	–	–	–
			–	Bone surf (9E+0)	–	1E-11	–	–
72	Hafnium-179m	D, see ^{170}Hf	1E+3	3E+2	1E-7	–	1E-5	1E-4
			–	Bone surf (6E+2)	–	8E-10	–	–
		W, see ^{170}Hf	–	6E+2	3E-7	8E-10	–	–
72	Hafnium-180m	D, see ^{170}Hf	7E+3	2E+4	9E-6	3E-8	1E-4	1E-3
		W, see ^{170}Hf	–	3E+4	1E-5	4E-8	–	–
72	Hafnium-181	D, see ^{170}Hf	1E+3	2E+2	7E-8	–	2E-5	2E-4
			–	Bone surf (4E+2)	–	6E-10	–	–
		W, see ^{170}Hf	–	4E+2	2E-7	6E-10	–	–
72	Hafnium-182m[b/]	D, see ^{170}Hf	4E+4	9E+4	4E-5	1E-7	5E-4	5E-3
		W, see ^{170}Hf	–	1E+5	6E-5	2E-7	–	–
72	Hafnium-182	D, see ^{170}Hf	2E+2	8E-1	3E-10	–	–	–
			Bone surf (4E+2)	Bone surf (2E+0)	–	2E-12	5E-6	5E-5
		W, see ^{170}Hf	–	3E+0	1E-9	–	–	–
			–	Bone surf (7E+0)	–	1E-11	–	–
72	Hafnium-183[b/]	D, see ^{170}Hf	2E+4	5E+4	2E-5	6E-8	3E-4	3E-3
		W, see ^{170}Hf	–	6E+4	2E-5	8E-8	–	–
72	Hafnium-184	D, see ^{170}Hf	2E+3	8E+3	3E-6	1E-8	3E-5	3E-4
		W, see ^{170}Hf	–	6E+3	3E-6	9E-9	–	–
73	Tantalum-172[b/]	W, all compounds except those given for Y	4E+4	1E+5	5E-5	2E-7	5E-4	5E-3
		Y, elemental Ta, oxides, hydroxides, halides, carbides, nitrates, and nitrides	–	1E+5	4E-5	1E-7	–	–
73	Tantalum-173	W, see ^{172}Ta	7E+3	2E+4	8E-6	3E-8	9E-5	9E-4
		Y, see ^{172}Ta	–	2E+4	7E-6	2E-8	–	–
73	Tantalum-174[b/]	W, see ^{172}Ta	3E+4	1E+5	4E-5	1E-7	4E-4	4E-3
		Y, see ^{172}Ta	–	9E+4	4E-5	1E-7	–	–

Footnotes appear at the end of these three tables.

Annual Limits on Intake (ALI) and Derived Air Concentrations (DAC) of Radionuclides for Occupational Exposure
Effluent Concentrations
Concentrations for Release to Sanitary Sewerage *(Continued)*

			Table I Occupational Values			Table II Effluent Concentrations		Table III Releases to Sewers
			Col. 1	Col. 2	Col. 3	Col. 1	Col. 2	
			Oral Ingestion	Inhalation				
Atomic No.	Radionuclide	Class	ALI (μCi)	ALI (μCi)	DAC (μCi/ml)	Air (μCi/ml)	Water (μCi/ml)	Monthly Average Concentration (μCi/ml)
73	Tantalum-175	W, see ^{172}Ta	6E+3	2E+4	7E-6	2E-8	8E-5	8E-4
		Y, see ^{172}Ta	–	1E+4	6E-6	2E-8	–	–
73	Tantalum-176	W, see ^{172}Ta	4E+3	1E+4	5E-6	2E-8	5E-5	5E-4
		Y, see ^{172}Ta	–	1E+4	5E-6	2E-8	–	–
73	Tantalum-177	W, see ^{172}Ta	1E+4	2E+4	8E-6	3E-8	2E-4	2E-3
		Y, see ^{172}Ta	–	2E+4	7E-6	2E-8	–	–
73	Tantalum-178	W, see ^{172}Ta	2E+4	9E+4	4E-5	1E-7	2E-4	2E-3
		Y, see ^{172}Ta	–	7E+4	3E-5	1E-7	–	–
73	Tantalum-179	W, see ^{172}Ta	2E+4	5E+3	2E-6	8E-9	3E-4	3E-3
		Y, see ^{172}Ta	–	9E+2	4E-7	1E-9	–	–
73	Tantalum-180m	W, see ^{172}Ta	2E+4	7E+4	3E-5	9E-8	3E-4	3E-3
		Y, see ^{172}Ta	–	6E+4	2E-5	8E-8	–	–
73	Tantalum-180	W, see ^{172}Ta	1E+3	4E+2	2E-7	6E-10	2E-5	2E-4
		Y, see ^{172}Ta	–	2E+1	1E-8	3E-11	–	–
73	Tantalum-182m[b/]	W, see ^{172}Ta	2E+5	5E+5	2E-4	8E-7	–	–
			St wall (2E+5)	–	–	–	3E-3	3E-2
		Y, see ^{172}Ta	–	4E+5	2E-4	6E-7	–	–
73	Tantalum-182	W, see ^{172}Ta	8E+2	3E+2	1E-7	5E-10	1E-5	1E-4
		Y, see ^{172}Ta	–	1E+2	6E-8	2E-10	–	–
73	Tantalum-183	W, see ^{172}Ta	9E+2	1E+3	5E-7	2E-9	–	–
			LLI wall (1E+3)	–	–	–	2E-5	2E-4
		Y, see ^{172}Ta	–	1E+3	4E-7	1E-9	–	–
73	Tantalum-184	W, see ^{172}Ta	2E+3	5E+3	2E-6	8E-9	3E-5	3E-4
		Y, see ^{172}Ta	–	5E+3	2E-6	7E-9	–	–
73	Tantalum-185[b/]	W, see ^{172}Ta	3E+4	7E+4	3E-5	1E-7	4E-4	4E-3
		Y, see ^{172}Ta	–	6E+4	3E-5	9E-8	–	–
73	Tantalum-186[b/]	W, see ^{172}Ta	5E+4	2E+5	1E-4	3E-7	–	–
			St wall (7E+4)	–	–	–	1E-3	1E-2
		Y, see ^{172}Ta	–	2E+5	9E-5	3E-7	–	–
74	Tungsten-176	D, all compounds	1E+4	5E+4	2E-5	7E-8	1E-4	1E-3
74	Tungsten-177	D, all compounds	2E+4	9E+4	4E-5	1E-7	3E-4	3E-3
74	Tungsten-178	D, all compounds	5E+3	2E+4	8E-6	3E-8	7E-5	7E-4

Footnotes appear at the end of these three tables.

Annual Limits on Intake (ALI) and Derived Air Concentrations (DAC) of Radionuclides for Occupational Exposure
Effluent Concentrations
Concentrations for Release to Sanitary Sewerage *(Continued)*

			Table I Occupational Values			Table II Effluent Concentrations		Table III Releases to Sewers
			Col. 1	Col. 2	Col. 3	Col. 1	Col. 2	
			Oral Ingestion	Inhalation				
Atomic No.	Radionuclide	Class	ALI (μCi)	ALI (μCi)	DAC (μCi/ml)	Air (μCi/ml)	Water (μCi/ml)	Monthly Average Concentration (μCi/ml)
74	Tungsten-179[b/]	D, all compounds	5E+5	2E+6	7E-4	2E-6	7E-3	7E-2
74	Tungsten-181	D, all compounds	2E+4	3E+4	1E-5	5E-8	2E-4	2E-3
74	Tungsten-185	D, all compounds	2E+3	7E+3	3E-6	9E-9	–	–
			LLI wall (3E+3)	–	–	–	4E-5	4E-4
74	Tungsten-187	D, all compounds	2E+3	9E+3	4E-6	1E-8	3E-5	3E-4
74	Tungsten-188	D, all compounds	4E+2	1E+3	5E-7	2E-9	–	–
			LLI wall (5E+2)	–	–	–	7E-6	7E-5
75	Rhenium-177[b/]	D, all compounds except those given for W	9E+4	3E+5	1E-4	4E-7	–	–
			St wall (1E+5)	–	–	–	2E-3	2E-2
		W, oxides, hydroxides, and nitrates	–	4E+5	1E-4	5E-7	–	–
75	Rhenium-178[b/]	D, see ^{177}Re	7E+4	3E+5	1E-4	4E-7	–	–
			St wall (1E+5)	–	–	–	1E-3	1E-2
		W, see ^{177}Re	–	3E+5	1E-4	4E-7	–	–
75	Rhenium-181	D, see ^{177}Re	5E+3	9E+3	4E-6	1E-8	7E-5	7E-4
		W, see ^{177}Re	–	9E+3	4E-6	1E-8	–	–
75	Rhenium-182 (12.7 h)	D, see ^{177}Re	7E+3	1E+4	5E-6	2E-8	9E-5	9E-4
		W, see ^{177}Re	–	2E+4	6E-6	2E-8	–	–
75	Rhenium-182 (64.0 h)	D, see ^{177}Re	1E+3	2E+3	1E-6	3E-9	2E-5	2E-4
		W, see ^{177}Re	–	2E+3	9E-7	3E-9	–	–
75	Rhenium-184m	D, see ^{177}Re	2E+3	3E+3	1E-6	4E-9	3E-5	3E-4
		W, see ^{177}Re	–	4E+2	2E-7	6E-10	–	–
75	Rhenium-184	D, see ^{177}Re	2E+3	4E+3	1E-6	5E-9	3E-5	3E-4
		W, see ^{177}Re	–	1E+3	6E-7	2E-9	–	–
75	Rhenium-186m	D, see ^{177}Re	1E+3	2E+3	7E-7	–	–	–
			St wall (2E+3)	St wall (2E+3)	–	3E-9	2E-5	2E-4
		W, see ^{177}Re	–	2E+2	6E-8	2E-10	–	–
75	Rhenium-186	D, see ^{177}Re	2E+3	3E+3	1E-6	4E-9	3E-5	3E-4
		W, see ^{177}Re	–	2E+3	7E-7	2E-9	–	–

Footnotes appear at the end of these three tables.

Annual Limits on Intake (ALI) and Derived Air Concentrations (DAC) of Radionuclides for Occupational Exposure
Effluent Concentrations
Concentrations for Release to Sanitary Sewerage *(Continued)*

			Table I Occupational Values			Table II Effluent Concentrations		Table III Releases to Sewers
			Col. 1	Col. 2	Col. 3	Col. 1	Col. 2	
			Oral Ingestion	Inhalation				Monthly Average
Atomic No.	Radionuclide	Class	ALI (μCi)	ALI (μCi)	DAC (μCi/ml)	Air (μCi/ml)	Water (μCi/ml)	Concentration (μCi/ml)
75	Rhenium-187	D, see ^{177}Re	6E+5	8E+5	4E-4	–	8E-3	8E-2
			–	St wall (9E+5)	–	1E-6	–	–
		W, see ^{177}Re	–	1E+5	4E-5	1E-7	–	–
75	Rhenium-188m[b/]	D, see ^{177}Re	8E+4	1E+5	6E-5	2E-7	1E-3	1E-2
		W, see ^{177}Re	–	1E+5	6E-5	2E-7	–	–
75	Rhenium-188	D, see ^{177}Re	2E+3	3E+3	1E-6	4E-9	2E-5	2E-4
		W, see ^{177}Re	–	3E+3	1E-6	4E-9	–	–
75	Rhenium-189	D, see ^{177}Re	3E+3	5E+3	2E-6	7E-9	4E-5	4E-4
		W, see ^{177}Re	–	4E+3	2E-6	6E-9	–	–
76	Osmium-180[b/]	D, all compounds except those given for W and Y	1E+5	4E+5	2E-4	5E-7	1E-3	1E-2
		W, halides and nitrates	–	5E+5	2E-4	7E-7	–	–
		Y, oxides and hydroxides	–	5E+5	2E-4	6E-7	–	–
76	Osmium-181[b/]	D, see ^{180}Os	1E+4	4E+4	2E-5	6E-8	2E-4	2E-3
		W, see ^{180}Os	–	5E+4	2E-5	6E-8	–	–
		Y, see ^{180}Os	–	4E+4	2E-5	6E-8	–	–
76	Osmium-182	D, see ^{180}Os	2E+3	6E+3	2E-6	8E-9	3E-5	3E-4
		W, see ^{180}Os	–	4E+3	2E-6	6E-9	–	–
		Y, see ^{180}Os	–	4E+3	2E-6	6E-9	–	–
76	Osmium-185	D, see ^{180}Os	2E+3	5E+2	2E-7	7E-10	3E-5	3E-4
		W, see ^{180}Os	–	8E+2	3E-7	1E-9	–	–
		Y, see ^{180}Os	–	8E+2	3E-7	1E-9	–	–
76	Osmium-189m	D, see ^{180}Os	8E+4	2E+5	1E-4	3E-7	1E-3	1E-2
		W, see ^{180}Os	–	2E+5	9E-5	3E-7	–	–
		Y, see ^{180}Os	–	2E+5	7E-5	2E-7	–	–
76	Osmium-191m	D, see ^{180}Os	1E+4	3E+4	1E-5	4E-8	2E-4	2E-3
		W, see ^{180}Os	–	2E+4	8E-6	3E-8	–	–
		Y, see ^{180}Os	–	2E+4	7E-6	2E-8	–	–
76	Osmium-191	D, see ^{180}Os	2E+3	2E+3	9E-7	3E-9	–	–
			LLI wall (3E+3)	–	–	–	3E-5	3E-4
		W, see ^{180}Os	–	2E+3	7E-7	2E-9	–	–
		Y, see ^{180}Os	–	1E+3	6E-7	2E-9	–	–
76	Osmium-193	D, see ^{180}Os	2E+3	5E+3	2E-6	6E-9	–	–
			LLI wall (2E+3)	–	–	–	2E-5	2E-4
		W, see ^{180}Os	–	3E+3	1E-6	4E-9	–	–
		Y, see ^{180}Os	–	3E+3	1E-6	4E-9	–	–

Footnotes appear at the end of these three tables.

Annual Limits on Intake (ALI) and Derived Air Concentrations (DAC) of Radionuclides for Occupational Exposure
Effluent Concentrations
Concentrations for Release to Sanitary Sewerage *(Continued)*

			Table I Occupational Values			Table II Effluent Concentrations		Table III Releases to Sewers
			Col. 1	Col. 2	Col. 3	Col. 1	Col. 2	
			Oral Ingestion	Inhalation				
Atomic No.	Radionuclide	Class	ALI (μCi)	ALI (μCi)	DAC (μCi/ml)	Air (μCi/ml)	Water (μCi/ml)	Monthly Average Concentration (μCi/ml)
76	Osmium-194	D, see ^{180}Os	4E+2	4E+1	2E-8	6E-11	–	–
			LLI wall (6E+2)	–	–	–	8E-6	8E-5
		W, see ^{180}Os	–	6E+1	2E-8	8E-11	–	–
		Y, see ^{180}Os	–	8E+0	3E-9	1E-11	–	–
77	Iridium-182[b/]	D, all compounds except those given for W and Y	4E+4	1E+5	6E-5	2E-7	–	–
			St wall (4E+4)	–	–	–	6E-4	6E-3
		W, halides, nitrates, and metallic iridium	–	2E+5	6E-5	2E-7	–	–
		Y, oxides and hydroxides	–	1E+5	5E-5	2E-7	–	–
77	Iridium-184	D, see ^{182}Ir	8E+3	2E+4	1E-5	3E-8	1E-4	1E-3
		W, see ^{182}Ir	–	3E+4	1E-5	5E-8	–	–
		Y, see ^{182}Ir	–	3E+4	1E-5	4E-8	–	–
77	Iridium-185	D, see ^{182}Ir	5E+3	1E+4	5E-6	2E-8	7E-5	7E-4
		W, see ^{182}Ir	–	1E+4	5E-6	2E-8	–	–
		Y, see ^{182}Ir	–	1E+4	4E-6	1E-8	–	–
77	Iridium-186	D, see ^{182}Ir	2E+3	8E+3	3E-6	1E-8	3E-5	3E-4
		W, see ^{182}Ir	–	6E+3	3E-6	9E-9	–	–
		Y, see ^{182}Ir	–	6E+3	2E-6	8E-9	–	–
77	Iridium-187	D, see ^{182}Ir	1E+4	3E+4	1E-5	5E-8	1E-4	1E-3
		W, see ^{182}Ir	–	3E+4	1E-5	4E-8	–	–
		Y, see ^{182}Ir	–	3E+4	1E-5	4E-8	–	–
77	Iridium-188	D, see ^{182}Ir	2E+3	5E+3	2E-6	6E-9	3E-5	3E-4
		W, see ^{182}Ir	–	4E+3	1E-6	5E-9	–	–
		Y, see ^{182}Ir	–	3E+3	1E-6	5E-9	–	–
77	Iridium-189	D, see ^{182}Ir	5E+3	5E+3	2E-6	7E-9	–	–
			LLI wall (5E+3)	–	–	–	7E-5	7E-4
		W, see ^{182}Ir	–	4E+3	2E-6	5E-9	–	–
		Y, see ^{182}Ir	–	4E+3	1E-6	5E-9	–	–
77	Iridium-190m[b/]	D, see ^{182}Ir	2E+5	2E+5	8E-5	3E-7	2E-3	2E-2
		W, see ^{182}Ir	–	2E+5	9E-5	3E-7	–	–
		Y, see ^{182}Ir	–	2E+5	8E-5	3E-7	–	–
77	Iridium-190	D, see ^{182}Ir	1E+3	9E+2	4E-7	1E-9	1E-5	1E-4
		W, see ^{182}Ir	–	1E+3	4E-7	1E-9	–	–
		Y, see ^{182}Ir	–	9E+2	4E-7	1E-9	–	–
77	Iridium-192m	D, see ^{182}Ir	3E+3	9E+1	4E-8	1E-10	4E-5	4E-4
		W, see ^{182}Ir	–	2E+2	9E-8	3E-10	–	–
		Y, see ^{182}Ir	–	2E+1	6E-9	2E-11	–	–

Footnotes appear at the end of these three tables.

Annual Limits on Intake (ALI) and Derived Air Concentrations (DAC) of Radionuclides for Occupational Exposure
Effluent Concentrations
Concentrations for Release to Sanitary Sewerage *(Continued)*

			Table I Occupational Values			Table II Effluent Concentrations		Table III Releases to Sewers
			Col. 1	Col. 2	Col. 3	Col. 1	Col. 2	
			Oral Ingestion	Inhalation				
Atomic No.	Radionuclide	Class	ALI (μCi)	ALI (μCi)	DAC (μCi/ml)	Air (μCi/ml)	Water (μCi/ml)	Monthly Average Concentration (μCi/ml)
77	Iridium-192	D, see ^{182}Ir	9E+2	3E+2	1E-7	4E-10	1E-5	1E-4
		W, see ^{182}Ir	–	4E+2	2E-7	6E-10	–	–
		Y, see ^{182}Ir	–	2E+2	9E-8	3E-10	–	–
77	Iridium-194m	D, see ^{182}Ir	6E+2	9E+1	4E-8	1E-10	9E-6	9E-5
		W, see ^{182}Ir	–	2E+2	7E-8	2E-10	–	–
		Y, see ^{182}Ir	–	1E+2	4E-8	1E-10	–	–
77	Iridium-194	D, see ^{182}Ir	1E+3	3E+3	1E-6	4E-9	1E-5	1E-4
		W, see ^{182}Ir	–	2E+3	9E-7	3E-9	–	–
		Y, see ^{182}Ir	–	2E+3	8E-7	3E-9	–	–
77	Iridium-195m	D, see ^{182}Ir	8E+3	2E+4	1E-5	3E-8	1E-4	1E-3
		W, see ^{182}Ir	–	3E+4	1E-5	4E-8	–	–
		Y, see ^{182}Ir	–	2E+4	9E-6	3E-8	–	–
77	Iridium-195	D, see ^{182}Ir	1E+4	4E+4	2E-5	6E-8	2E-4	2E-3
		W, see ^{182}Ir	–	5E+4	2E-5	7E-8	–	–
		Y, see ^{182}Ir	–	4E+4	2E-5	6E-8	–	–
78	Platinum-186	D, all compounds	1E+4	4E+4	2E-5	5E-8	2E-4	2E-3
78	Platinum-188	D, all compounds	2E+3	2E+3	7E-7	2E-9	2E-5	2E-4
78	Platinum-189	D, all compounds	1E+4	3E+4	1E-5	4E-8	1E-4	1E-3
78	Platinum-191	D, all compounds	4E+3	8E+3	4E-6	1E-8	5E-5	5E-4
78	Platinum-193m	D, all compounds	3E+3	6E+3	3E-6	8E-9	–	–
			LLI wall (3E+4)	–	–	–	4E-5	4E-4
78	Platinum-193	D, all compounds	4E+4	2E+4	1E-5	3E-8	–	–
			LLI wall (5E+4)	–	–	–	6E-4	6E-3
78	Platinum-195m	D, all compounds	2E+3	4E+3	2E-6	6E-9	–	–
			LLI wall (2E+3)	–	–	–	3E-5	3E-4
78	Platinum-197m[b/]	D, all compounds	2E+4	4E+4	2E-5	6E-8	2E-4	2E-3
78	Platinum-197	D, all compounds	3E+3	1E+4	4E-6	1E-8	4E-5	4E-4
78	Platinum-199[b/]	D, all compounds	5E+4	1E+5	6E-5	2E-7	7E-4	7E-3
78	Platinum-200	D, all compounds	1E+3	3E+3	1E-6	5E-9	2E-5	2E-4

Footnotes appear at the end of these three tables.

Annual Limits on Intake (ALI) and Derived Air Concentrations (DAC) of Radionuclides for Occupational Exposure
Effluent Concentrations
Concentrations for Release to Sanitary Sewerage *(Continued)*

			Table I Occupational Values			Table II Effluent Concentrations		Table III Releases to Sewers
			Col. 1	Col. 2	Col. 3	Col. 1	Col. 2	
			Oral Ingestion	Inhalation				
Atomic No.	Radionuclide	Class	ALI (μCi)	ALI (μCi)	DAC (μCi/ml)	Air (μCi/ml)	Water (μCi/ml)	Monthly Average Concentration (μCi/ml)
79	Gold-193	D, all compounds except those given for W and Y	9E+3	3E+4	1E-5	4E-8	1E-4	1E-3
		W, halides and nitrates	–	2E+4	9E-6	3E-8	–	–
		Y, oxides and hydroxides	–	2E+4	8E-6	3E-8	–	–
79	Gold-194	D, see ^{193}Au	3E+3	8E+3	3E-6	1E-8	4E-5	4E-4
		W, see ^{193}Au	–	5E+3	2E-6	8E-9	–	–
		Y, see ^{193}Au	–	5E+3	2E-6	7E-9	–	–
79	Gold-195	D, see ^{193}Au	5E+3	1E+4	5E-6	2E-8	7E-5	7E-4
		W, see ^{193}Au	–	1E+3	6E-7	2E-9	–	–
		Y, see ^{193}Au	–	4E+2	2E-7	6E-10	–	–
79	Gold-198m	D, see ^{193}Au	1E+3	3E+3	1E-6	4E-9	1E-5	1E-4
		W, see ^{193}Au	–	1E+3	5E-7	2E-9	–	–
		Y, see ^{193}Au	–	1E+3	5E-7	2E-9	–	–
79	Gold-198	D, see ^{193}Au	1E+3	4E+3	2E-6	5E-9	2E-5	2E-4
		W, see ^{193}Au	–	2E+3	8E-7	3E-9	–	–
		Y, see ^{193}Au	–	2E+3	7E-7	2E-9	–	–
79	Gold-199	D, see ^{193}Au	3E+3	9E+3	4E-6	1E-8	–	–
			LLI wall (3E+3)	–	–	–	4E-5	4E-4
		W, see ^{193}Au	–	4E+3	2E-6	6E-9	–	–
		Y, see ^{193}Au	–	4E+3	2E-6	5E-9	–	–
79	Gold-200m	D, see ^{193}Au	1E+3	4E+3	1E-6	5E-9	2E-5	2E-4
		W, see ^{193}Au	–	3E+3	1E-6	4E-9	–	–
		Y, see ^{193}Au	–	2E+4	1E-6	3E-9	–	–
79	Gold-200[b/]	D, see ^{193}Au	3E+4	6E+4	3E-5	9E-8	4E-4	4E-3
		W, see ^{193}Au	–	8E+4	3E-5	1E-7	–	–
		Y, see ^{193}Au	–	7E+4	3E-5	1E-7	–	–
79	Gold-201[b/]	D, see ^{193}Au	7E+4	2E+5	9E-5	3E-7	–	–
			St wall (9E+4)	–	–	–	1E-3	1E-2
		W, see ^{193}Au	–	2E+5	1E-4	3E-7	–	–
		Y, see ^{193}Au	–	2E+5	9E-5	3E-7	–	–
80	Mercury-193m	Vapor	–	8E+3	4E-6	1E-8	–	–
		Organic D	4E+3	1E+4	5E-6	2E-8	6E-5	6E-4
		D, sulfates	3E+3	9E+3	4E-6	1E-8	4E-5	4E-4
		W, oxides, hydroxides, halides, nitrates, and sulfides	–	8E+3	3E-6	1E-8	–	–

Footnotes appear at the end of these three tables.

Annual Limits on Intake (ALI) and Derived Air Concentrations (DAC) of Radionuclides for Occupational Exposure
Effluent Concentrations
Concentrations for Release to Sanitary Sewerage *(Continued)*

			Table I Occupational Values			Table II Effluent Concentrations		Table III Releases to Sewers
			Col. 1	Col. 2	Col. 3	Col. 1	Col. 2	
			Oral Ingestion	Inhalation				
Atomic No.	Radionuclide	Class	ALI (μCi)	ALI (μCi)	DAC (μCi/ml)	Air (μCi/ml)	Water (μCi/ml)	Monthly Average Concentration (μCi/ml)
80	Mercury-193	Vapor	–	3E+4	1E-5	4E-8	–	–
		Organic D	2E+4	6E+4	3E-5	9E-8	3E-4	3E-3
		D, see ^{193m}Hg	2E+4	4E+4	2E-5	6E-8	2E-4	2E-3
		W, see ^{193m}Hg	–	4E+4	2E-5	6E-8	–	–
80	Mercury-194	Vapor	–	3E+1	1E-8	4E-11	–	–
		Organic D	2E+1	3E+1	1E-8	4E-11	2E-7	2E-6
		D, see ^{193m}Hg	8E+2	4E+1	2E-8	6E-11	1E-5	1E-4
		W, see ^{193m}Hg	–	1E+2	5E-8	2E-10	–	–
80	Mercury-195m	Vapor	–	4E+3	2E-6	6E-9	–	–
		Organic D	3E+3	6E+3	3E-6	8E-9	4E-5	4E-4
		D, see ^{193m}Hg	2E+3	5E+3	2E-6	7E-9	3E-5	3E-4
		W, see ^{193m}Hg	–	4E+3	2E-6	5E-9	–	–
80	Mercury-195	Vapor	–	3E+4	1E-5	4E-8	–	–
		Organic D	2E+4	5E+4	2E-5	6E-8	2E-4	2E-3
		D, see ^{193m}Hg	1E+4	4E+4	1E-5	5E-8	2E-4	2E-3
		W, see ^{193m}Hg	–	3E+4	1E-5	5E-8	–	–
80	Mercury-197m	Vapor	–	5E+3	2E-6	7E-9	–	–
		Organic D	4E+3	9E+3	4E-6	1E-8	5E-5	5E-4
		D, see ^{193m}Hg	3E+3	7E+3	3E-6	1E-8	4E-5	4E-4
		W, see ^{193m}Hg	–	5E+3	2E-6	7E-9	–	–
80	Mercury-197	Vapor	–	8E+3	4E-6	1E-8	–	–
		Organic D	7E+3	1E+4	6E-6	2E-8	9E-5	9E-4
		D, see ^{193m}Hg	6E+3	1E+4	5E-6	2E-8	8E-5	8E-4
		W, see ^{193m}Hg	–	9E+3	4E-6	1E-8	–	–
80	Mercury-199m[b/]	Vapor	–	8E+4	3E-5	1E-7	–	–
		Organic D	6E+4	2E+5	7E-5	2E-7	–	–
			St wall (1E+5)	–	–	–	1E-3	1E-2
		D, see ^{193m}Hg	6E+4	1E+5	6E-5	2E-7	8E-4	8E-3
		W, see ^{193m}Hg	–	2E+5	7E-5	2E-7	–	–
80	Mercury-203	Vapor	–	8E+2	4E-7	1E-9	–	–
		Organic D	5E+2	8E+2	3E-7	1E-9	7E-6	7E-5
		D, see ^{193m}Hg	2E+3	1E+3	5E-7	2E-9	3E-5	3E-4
		W, see ^{193m}Hg	–	1E+3	5E-7	2E-9	–	–
81	Thallium-194m[b/]	D, all compounds	5E+4	2E+5	6E-5	2E-7	–	–
			St wall (7E+4)	–	–	–	1E-3	1E-2
81	Thallium-194[b/]	D, all compounds	3E+5	6E+5	2E-4	8E-7	–	–
			St wall (3E+5)	–	–	–	4E-3	4E-2
81	Thallium-195[b/]	D, all compounds	6E+4	1E+5	5E-5	2E-7	9E-4	9E-3

Footnotes appear at the end of these three tables.

Annual Limits on Intake (ALI) and Derived Air Concentrations (DAC) of Radionuclides for Occupational Exposure
Effluent Concentrations
Concentrations for Release to Sanitary Sewerage *(Continued)*

			Table I Occupational Values			Table II Effluent Concentrations		Table III Releases to Sewers
			Col. 1	Col. 2	Col. 3	Col. 1	Col. 2	
			Oral Ingestion	Inhalation				
Atomic No.	Radionuclide	Class	ALI (μCi)	ALI (μCi)	DAC (μCi/ml)	Air (μCi/ml)	Water (μCi/ml)	Monthly Average Concentration (μCi/ml)
81	Thallium-197	D, all compounds	7E+4	1E+5	5E-5	2E-7	1E-3	1E-2
81	Thallium-198m[b/]	D, all compounds	3E+4	5E+4	2E-5	8E-8	4E-4	4E-3
81	Thallium-198	D, all compounds	2E+4	3E+4	1E-5	5E-8	3E-4	3E-3
81	Thallium-199	D, all compounds	6E+4	8E+4	4E-5	1E-7	9E-4	9E-3
81	Thallium-200	D, all compounds	8E+3	1E+4	5E-6	2E-8	1E-4	1E-3
81	Thallium-201	D, all compounds	2E+4	2E+4	9E-6	3E-8	2E-4	2E-3
81	Thallium-202	D, all compounds	4E+3	5E+3	2E-6	7E-9	5E-5	5E-4
81	Thallium-204	D, all compounds	2E+3	2E+3	9E-7	3E-9	2E-5	2E-4
82	Lead-195m[b/]	D, all compounds	6E+4	2E+5	8E-5	3E-7	8E-4	8E-3
82	Lead-198	D, all compounds	3E+4	6E+4	3E-5	9E-8	4E-4	4E-3
82	Lead-199[b/]	D, all compounds	2E+4	7E+4	3E-5	1E-7	3E-4	3E-3
82	Lead-200	D, all compounds	3E+3	6E+3	3E-6	9E-9	4E-5	4E-4
82	Lead-201	D, all compounds	7E+3	2E+4	8E-6	3E-8	1E-4	1E-3
82	Lead-202m	D, all compounds	9E+3	3E+4	1E-5	4E-8	1E-4	1E-3
82	Lead-202	D, all compounds	1E+2	5E+1	2E-8	7E-11	2E-6	2E-5
82	Lead-203	D, all compounds	5E+3	9E+3	4E-6	1E-8	7E-5	7E-4
82	Lead-205	D, all compounds	4E+3	1E+3	6E-7	2E-9	5E-5	5E-4
82	Lead-209	D, all compounds	2E+4	6E+4	2E-5	8E-8	3E-4	3E-3
82	Lead-210	D, all compounds	6E-1	2E-1	1E-10	–	–	–
			Bone surf (1E+0)	Bone surf (4E-1)	–	6E-13	1E-8	1E-7
82	Lead-211[b/]	D, all compounds	1E+4	6E+2	3E-7	9E-10	2E-4	2E-3
82	Lead-212	D, all compounds	8E+1	3E+1	1E-8	5E-11	–	–
			Bone surf (1E+2)	–	–	–	2E-6	2E-5
82	Lead-214[b/]	D, all compounds	9E+3	8E+2	3E-7	1E-9	1E-4	1E-3
83	Bismuth-200[b/]	D, nitrates	3E+4	8E+4	4E-5	1E-7	4E-4	4E-3
		W, all other compounds	–	1E+5	4E-5	1E-7	–	–

Footnotes appear at the end of these three tables.

Annual Limits on Intake (ALI) and Derived Air Concentrations (DAC) of Radionuclides for Occupational Exposure
Effluent Concentrations
Concentrations for Release to Sanitary Sewerage *(Continued)*

			Table I Occupational Values			Table II Effluent Concentrations		Table III Releases to Sewers
			Col. 1	Col. 2	Col. 3	Col. 1	Col. 2	
			Oral Ingestion	Inhalation				
Atomic No.	Radionuclide	Class	ALI (μCi)	ALI (μCi)	DAC (μCi/ml)	Air (μCi/ml)	Water (μCi/ml)	Monthly Average Concentration (μCi/ml)
83	Bismuth-201[b/]	D, see ^{200}Bi	1E+4	3E+4	1E-5	4E-8	2E-4	2E-3
		W, see ^{200}Bi	–	4E+4	2E-5	5E-8	–	–
83	Bismuth-202[b/]	D, see ^{200}Bi	1E+4	4E+4	2E-5	6E-8	2E-4	2E-3
		W, see ^{200}Bi	–	8E+4	3E-5	1E-7	–	–
83	Bismuth-203	D, see ^{200}Bi	2E+3	7E+3	3E-6	9E-9	3E-5	3E-4
		W, see ^{200}Bi	–	6E+3	3E-6	9E-9	–	–
83	Bismuth-205	D, see ^{200}Bi	1E+3	3E+3	1E-6	3E-9	2E-5	2E-4
		W, see ^{200}Bi	–	1E+3	5E-7	2E-9	–	–
83	Bismuth-206	D, see ^{200}Bi	6E+2	1E+3	6E-7	2E-9	9E-6	9E-5
		W, see ^{200}Bi	–	9E+2	4E-7	1E-9	–	–
83	Bismuth-207	D, see ^{200}Bi	1E+3	2E+3	7E-7	2E-9	1E-5	1E-4
		W, see ^{200}Bi	–	4E+2	1E-7	5E-10	–	–
83	Bismuth-210m	D, see ^{200}Bi	4E+1	5E+0	2E-9	–	–	–
			Kidneys	Kidneys				
			(6E+1)	(6E+0)	–	9E-12	8E-7	8E-6
		W, see ^{200}Bi	–	7E-1	3E-10	9E-13	–	–
83	Bismuth-210	D, see ^{200}Bi	8E+2	2E+2	1E-7	–	1E-5	1E-4
			–	Kidneys				
			–	(4E+2)	–	5E-10	–	–
		W, see ^{200}Bi	–	3E+1	1E-8	4E-11	–	–
83	Bismuth-212[b/]	D, see ^{200}Bi	5E+3	2E+2	1E-7	3E-10	7E-5	7E-4
		W, see ^{200}Bi	–	3E+2	1E-7	4E-10	–	–
83	Bismuth-213[b/]	D, see ^{200}Bi	7E+3	3E+2	1E-7	4E-10	1E-4	1E-3
		W, see ^{200}Bi	–	4E+2	1E-7	5E-10	–	–
83	Bismuth-214[b/]	D, see ^{200}Bi	2E+4	8E+2	3E-7	1E-9	–	–
			St wall					
			(2E+4)	–	–	–	3E-4	3E-3
		W, see ^{200}Bi	–	9E-2	4E-7	1E-9	–	–
84	Polonium-203[b/]	D, all compounds except those given for W	3E+4	6E+4	3E-5	9E-8	3E-4	3E-3
		W, oxides, hydroxides, and nitrates	–	9E+4	4E-5	1E-7	–	–
84	Polonium-205[b/]	D, see ^{203}Po	2E+4	4E+4	2E-5	5E-8	3E-4	3E-3
		W, see ^{203}Po	–	7E+4	3E-5	1E-7	–	–
84	Polonium-207	D, see ^{203}Po	8E+3	3E+4	1E-5	3E-8	1E-4	1E-3
		W, see ^{203}Po	–	3E+4	1E-5	4E-8	–	–

Footnotes appear at the end of these three tables.

Annual Limits on Intake (ALI) and Derived Air Concentrations (DAC) of Radionuclides for Occupational Exposure
Effluent Concentrations
Concentrations for Release to Sanitary Sewerage *(Continued)*

			Table I Occupational Values			Table II Effluent Concentrations		Table III Releases to Sewers
			Col. 1	Col. 2	Col. 3	Col. 1	Col. 2	
			Oral Ingestion	Inhalation				
Atomic No.	Radionuclide	Class	ALI (μCi)	ALI (μCi)	DAC (μCi/ml)	Air (μCi/ml)	Water (μCi/ml)	Monthly Average Concentration (μCi/ml)
84	Polonium-210	D, see ^{203}Po	3E+0	6E-1	3E-10	9E-13	4E-8	4E-7
		W, see ^{203}Po	–	6E-1	3E-10	9E-13	–	–
85	Astatine-207[b/]	D, halides	6E+3	3E+3	1E-6	4E-9	8E-5	8E-4
		W	–	2E+3	9E-7	3E-9	–	–
85	Astatine-211	D, halides	1E+2	8E+1	3E-8	1E-10	2E-6	2E-5
		W	–	5E+1	2E-8	8E-11	–	–
86	Radon-220	With daughters removed	–	2E+4	7E-6	2E-8	–	–
		With daughters present	–	2E+1 (or 12 WLM)	9E-9 (or 1.0 WL)	3E-11	–	–
86	Radon-222	With daughters removed	–	1E+4	4E-6	1E-8	–	–
		With daughters present	–	1E+2 (or 4 WLM)	3E-8 (or 0.33 WL)	1E-10	–	–
87	Francium-222[b/]	D, all compounds	2E+3	5E+2	2E-7	6E-10	3E-5	3E-4
87	Francium-223[b/]	D, all compounds	6E+2	8E+2	3E-7	1E-9	8E-6	8E-5
88	Radium-223	W, all compounds	5E+0	7E-1	3E-10	9E-13	–	–
			Bone surf (9E+0)	–	–	–	1E-7	1E-6
88	Radium-224	W, all compounds	8E+0	2E+0	7E-10	2E-12	–	–
			Bone surf (2E+1)	–	–	–	2E-7	2E-6
88	Radium-225	W, all compounds	8E+0	7E-1	3E-10	9E-13	–	–
			Bone surf (2E+1)	–	–	–	2E-7	2E-6
88	Radium-226	W, all compounds	2E+0	6E-1	3E-10	9E-13	–	–
			Bone surf (5E+0)	–	–	–	6E-8	6E-7
88	Radium-227[b/]	W, all compounds	2E+4	1E+4	6E-6	–	–	–
			Bone surf (2E+4)	Bone surf (2E+4)	–	3E-8	3E-4	3E-3
88	Radium-228	W, all compounds	2E+0	1E+0	5E-10	2E-12	–	–
			Bone surf (4E+0)	–	–	–	6E-8	6E-7

Footnotes appear at the end of these three tables.

Annual Limits on Intake (ALI) and Derived Air Concentrations (DAC) of Radionuclides for Occupational Exposure
Effluent Concentrations
Concentrations for Release to Sanitary Sewerage *(Continued)*

			Table I Occupational Values			Table II Effluent Concentrations		Table III Releases to Sewers
			Col. 1	Col. 2	Col. 3	Col. 1	Col. 2	
			Oral Ingestion	Inhalation				
Atomic No.	Radionuclide	Class	ALI (μCi)	ALI (μCi)	DAC (μCi/ml)	Air (μCi/ml)	Water (μCi/ml)	Monthly Average Concentration (μCi/ml)
89	Actinium-224	D, all compounds except those given for W and Y	2E+3	3E+1	1E-8	–	–	–
			LLI wall (2E+3)	Bone surf (4E+1)	–	5E-11	3E-5	3E-4
		W, halides and nitrates	–	5E+1	2E-8	7E-11	–	–
		Y, oxides and hydroxides	–	5E+1	2E-8	6E-11	–	–
89	Actinium-225	D, see ^{224}Ac	5E+1	3E-1	1E-10	–	–	–
			LLI wall (5E+1)	Bone surf (5E-1)	-	7E-13	7E-7	7E-6
		W, see ^{224}Ac	–	6E-1	3E-10	9E-13	–	–
		Y, see ^{224}Ac	–	6E-1	3E-10	9E-13	–	–
89	Actinium-226	D, see ^{224}Ac	1E+2	3E+0	1E-9	–	–	–
			LLI wall (1E+2)	Bone surf (4E+0)	–	5E-12	2E-6	2E-5
		W, see ^{224}Ac	–	5E+0	2E-9	7E-12	–	–
		Y, see ^{224}Ac	–	5E+0	2E-9	6E-12	–	–
89	Actinium-227	D, see ^{224}Ac	2E-1	4E-4	2E-13	–	–	–
			Bone surf (4E-1)	Bone surf (8E-4)	–	1E-15	5E-9	5E-8
		W, see ^{224}Ac	–	2E-3	7E-13	–	–	–
			–	Bone surf (3E-3)	–	4E-15	–	–
		Y, see ^{224}Ac	–	4E-3	2E-12	6E-15	–	–
89	Actinium-228	D, see ^{224}Ac	2E+3	9E+0	4E-9	–	3E-5	3E-4
			–	Bone surf (2E+1)	–	2E-11	–	–
		W, see ^{224}Ac	–	4E+1	2E-8	–	–	–
			–	Bone surf (6E+1)	–	8E-11	–	–
		Y, see ^{224}Ac	–	4E+1	2E-8	6E-11	–	–
90	Thorium-226[b/]	W, all compounds except those given for Y	5E+3	2E+2	6E-8	2E-10	–	–
			St wall (5E+3)	–	–	–	7E-5	7E-4
		Y, oxides and hydroxides	–	1E+2	6E-8	2E-10	–	–
90	Thorium-227	W, see ^{226}Th	1E+2	3E-1	1E-10	5E-13	2E-6	2E-5
		Y, see ^{226}Th	–	3E-1	1E-10	5E-13	–	–
90	Thorium-228	W, see ^{226}Th	6E+0	1E-2	4E-12	–	–	–
			Bone surf (1E+1)	Bone surf (2E-2)	–	3E-14	2E-7	2E-6
		Y, see ^{226}Th	–	2E-2	7E-12	2E-14	–	–

Footnotes appear at the end of these three tables.

Annual Limits on Intake (ALI) and Derived Air Concentrations (DAC) of Radionuclides for Occupational Exposure
Effluent Concentrations
Concentrations for Release to Sanitary Sewerage *(Continued)*

			Table I Occupational Values			Table II Effluent Concentrations		Table III Releases to Sewers
			Col. 1	Col. 2	Col. 3	Col. 1	Col. 2	
			Oral Ingestion	Inhalation				
Atomic No.	Radionuclide	Class	ALI (μCi)	ALI (μCi)	DAC (μCi/ml)	Air (μCi/ml)	Water (μCi/ml)	Monthly Average Concentration (μCi/ml)
90	Thorium-229	W, see ^{226}Th	6E-1	9E-4	4E-13	–	–	–
			Bone surf (1E+0)	Bone surf (2E-3)	–	3E-15	2E-8	2E-7
		Y, see ^{226}Th	–	2E-3	1E-12	–	–	–
			–	Bone surf (3E-3)	–	4E-15	–	–
90	Thorium-230	W, see ^{226}Th	4E+0	6E-3	3E-12	–	–	–
			Bone surf (9E+0)	Bone surf (2E-2)	–	2E-14	1E-7	1E-6
		Y, see ^{226}Th	–	2E-2	6E-12	–	–	–
			–	Bone surf (2E-2)	–	3E-14	–	–
90	Thorium-231	W, see ^{226}Th	4E+3	6E+3	3E-6	9E-9	5E-5	5E-4
		Y, see ^{226}Th	–	6E+3	3E-6	9E-9	–	–
90	Thorium-232	W, see ^{226}Th	7E-1	1E-3	5E-13	–	–	–
			Bone surf (2E+0)	Bone surf (3E-3)	–	4E-15	3E-8	3E-7
		Y, see ^{226}Th	–	3E-3	1E-12	–	–	–
			–	Bone sur (4E-3)	–	6E-15	–	–
90	Thorium-234	W, see ^{226}Th	3E+2	2E+2	8E-8	3E-10	–	–
			LLI wall (4E+2)	–	–	–	5E-6	5E-5
		Y, see ^{226}Th	–	2E+2	6E-8	2E-10	–	–
91	Protactinium-227[b/]	W, all compounds except those given for Y	4E+3	1E+2	5E-8	2E-10	5E-5	5E-4
		Y, oxides and hydroxides	–	1E+2	4E-8	1E-10	–	–
91	Protactinium-228	W, see ^{227}Pa	1E+3	1E+1	5E-9	–	2E-5	2E-4
			–	Bone surf (2E+1)	–	3E-11	–	–
		Y, see ^{227}Pa	–	1E+1	5E-9	2E-11	–	–
91	Protactinium-230	W, see ^{227}Pa	6E+2	5E+0	2E-9	7E-12	–	–
			Bone surf (9E+2)	–	–	–	1E-5	1E-4
		Y, see ^{227}Pa	–	4E+0	1E-9	5E-12	–	–
91	Protactinium-231	W, see ^{227}Pa	2E-1	2E-3	6E-13	–	–	–
			Bone surf (5E-1)	Bone surf (4E-3)	–	6E-15	6E-9	6E-8
		Y, see ^{227}Pa	–	4E-3	2E-12	–	–	–
			–	Bone surf (6E-3)	–	8E-15	–	–

Footnotes appear at the end of these three tables.

Annual Limits on Intake (ALI) and Derived Air Concentrations (DAC) of Radionuclides for Occupational Exposure
Effluent Concentrations
Concentrations for Release to Sanitary Sewerage *(Continued)*

			Table I Occupational Values			Table II Effluent Concentrations		Table III Releases to Sewers
			Col. 1	Col. 2	Col. 3	Col. 1	Col. 2	
			Oral Ingestion	Inhalation				
Atomic No.	Radionuclide	Class	ALI (μCi)	ALI (μCi)	DAC (μCi/ml)	Air (μCi/ml)	Water (μCi/ml)	Monthly Average Concentration (μCi/ml)
91	Protactinium-232	W, see ^{227}Pa	1E+3	2E+1	9E-9	–	2E-5	2E-4
			–	Bone surf (6E+1)	–	8E-11	–	–
		Y, see ^{227}Pa	–	6E+1	2E-8	–	–	–
			–	Bone surf (7E+1)	–	1E-10	–	–
91	Protactinium-233	W, see ^{227}Pa	1E+3	7E+2	3E-7	1E-9	–	–
			LLI wall (2E+3)	–	–	–	2E-5	2E-4
		Y, see ^{227}Pa	–	6E+2	2E-7	8E-10	–	–
91	Protactinium-234	W, see ^{227}Pa	2E+3	8E+3	3E-6	1E-8	3E-5	3E-4
		Y, see ^{227}Pa	–	7E+3	3E-6	9E-9	–	–
92	Uranium-230	D, UF_6, UO_2F_2, $UO_2(NO_3)_2$	4E+0	4E-1	2E-10	–	–	–
			Bone surf (6E+0)	Bone surf (6E-1)	–	8E-13	8E-8	8E-7
		W, UO_3, UF_4, UCl_4	–	4E-1	1E-10	5E-13	–	–
		Y, UO_2, U_3O_8	–	3E-1	1E-10	4E-13	–	–
92	Uranium-231	D, see ^{230}U	5E+3	8E+3	3E-6	1E-8	–	–
			LLI wall (4E+3)	–	–	–	6E-5	6E-4
		W, see ^{230}U	–	6E+3	2E-6	8E-9	–	–
		Y, see ^{230}U	–	5E+3	2E-6	6E-9	–	–
92	Uranium-232	D, see ^{230}U	2E+0	2E-1	9E-11	–	–	–
			Bone surf (4E+0)	Bone surf (4E-1)	–	6E-13	6E-8	6E-7
		W, see ^{230}U	–	4E-1	2E-10	5E-13	–	–
		Y, see ^{230}U	–	8E-3	3E-12	1E-14	–	–
92	Uranium-233	D, see ^{230}U	1E+1	1E+0	5E-10	–	–	–
			Bone surf (2E+1)	Bone surf (2E+0)	–	3E-12	3E-7	3E-6
		W, see ^{230}U	–	7E-1	3E-10	1E-12	–	–
		Y, see ^{230}U	–	4E-2	2E-11	5E-14	–	–
92	Uranium-234[e/]	D, see ^{230}U	1E+1	1E+0	5E-10	–	–	–
			Bone surf (2E+1)	Bone surf (2E+0)	–	3E-12	3E-7	3E-6
		W, see ^{230}U	–	7E-1	3E-10	1E-12	–	–
		Y, see ^{230}U	–	4E-2	2E-11	5E-14	–	–

Footnotes appear at the end of these three tables.

Annual Limits on Intake (ALI) and Derived Air Concentrations (DAC) of Radionuclides for Occupational Exposure
Effluent Concentrations
Concentrations for Release to Sanitary Sewerage *(Continued)*

			Table I Occupational Values			Table II Effluent Concentrations		Table III Releases to Sewers
			Col. 1	Col. 2	Col. 3	Col. 1	Col. 2	
			Oral Ingestion	Inhalation				
Atomic No.	Radionuclide	Class	ALI (μCi)	ALI (μCi)	DAC (μCi/ml)	Air (μCi/ml)	Water (μCi/ml)	Monthly Average Concentration (μCi/ml)
92	Uranium-235[e/]	D, see ^{230}U	1E+1	1E+0	6E-10	–	–	–
			Bone surf (2E+1)	Bone surf (2E+0)	–	3E-12	3E-7	3E-6
		W, see ^{230}U	–	8E-1	3E-10	1E-12	–	–
		Y, see ^{230}U	–	4E-2	2E-11	6E-14	–	–
92	Uranium-236	D, see ^{230}U	1E+1	1E+0	5E-10	–	–	–
			Bone surf (2E+1)	Bone surf (2E+0)	–	3E-12	3E-7	3E-6
		W, see ^{230}U	–	8E-1	3E-10	1E-12	–	–
		Y, see ^{230}U	–	4E-2	2E-11	6E-14	–	–
92	Uranium-237	D, see ^{230}U	2E+3	3E+3	1E-6	4E-9	–	–
			LLI wall (2E+3)	–	–	-	3E-5	3E-4
		W, see ^{230}U	–	2E+3	7E-7	2E-9	–	–
		Y, see ^{230}U	–	2E+3	6E-7	2E-9	–	–
92	Uranium-238[e/]	D, see ^{230}U	1E+1	1E+0	6E-10	–	–	–
			Bone surf (2E+1)	Bone surf (2E+0)	–	3E-12	3E-7	3E-6
		W, see ^{230}U	–	8E-1	3E-10	1E-12	–	–
		Y, see ^{230}U	–	4E-2	2E-11	6E-14	–	–
92	Uranium-239[b/]	D, see ^{230}U	7E+4	2E+5	8E-5	3E-7	9E-4	9E-3
		W, see ^{230}U	–	2E+5	7E-5	2E-7	–	–
		Y, see ^{230}U	–	2E+5	6E-5	2E-7	–	–
92	Uranium-240	D, see ^{230}U	1E+3	4E+3	2E-6	5E-9	2E-5	2E-4
		W, see ^{230}U	–	3E+3	1E-6	4E-9	–	–
		Y, see ^{230}U	–	2E+3	1E-6	3E-9	–	–
92	Uranium-natural[e/]	D, see ^{230}U	1E+1	1E+0	5E-10	–	–	–
			Bone surf (2E+1)	Bone surf (2E+0)	–	3E-12	3E-7	3E-6
		W, see ^{230}U	–	8E-1	3E-10	9E-13	–	–
		Y, see ^{230}U	–	5E-2	2E-11	9E-14	–	–
93	Neptunium-232[b/]	W, all compounds	1E+5	2E+3	7E-7	–	2E-3	2E-2
			–	Bone surf (5E+2)	–	6E-9	–	–
93	Neptunium-233[b/]	W, all compounds	8E+5	3E+6	1E-3	4E-6	1E-2	1E-1
93	Neptunium-234	W, all compounds	2E+3	3E+3	1E-6	4E-9	3E-5	3E-4
93	Neptunium-235	W, all compounds	2E+4	8E+2	3E-7	–	–	–
			LLI wall (2E+4)	Bone surf (1E+3)	–	2E-9	3E-4	3E-3

Footnotes appear at the end of these three tables.

Annual Limits on Intake (ALI) and Derived Air Concentrations (DAC) of Radionuclides for Occupational Exposure
Effluent Concentrations
Concentrations for Release to Sanitary Sewerage *(Continued)*

			Table I Occupational Values			Table II Effluent Concentrations		Table III Releases to Sewers
			Col. 1	Col. 2	Col. 3	Col. 1	Col. 2	
			Oral Ingestion	Inhalation				
Atomic No.	Radionuclide	Class	ALI (μCi)	ALI (μCi)	DAC (μCi/ml)	Air (μCi/ml)	Water (μCi/ml)	Monthly Average Concentration (μCi/ml)
93	Neptunium-236 (1.15E+5 y)	W, all compounds	3E+0	2E-2	9E-12	–	–	–
			Bone surf (6E+0)	Bone surf (5E-2)	–	8E-14	9E-8	9E-7
93	Neptunium-236 (22.5 h)	W, all compounds	3E+3	3E+1	1E-8	–	–	–
			Bone surf (4E+3)	Bone surf (7E+1)	–	1E-10	5E-5	5E-4
93	Neptunium-237	W, all compounds	5E-1	4E-3	2E-12	–	–	–
			Bone surf (1E+0)	Bone surf (1E-2)	–	1E-14	2E-8	2E-7
93	Neptunium-238	W, all compounds	1E+3	6E+1	3E-8	–	2E-5	2E-4
			–	Bone surf (2E+2)	–	2E-10	–	–
93	Neptunium-239	W, all compounds	2E+3	2E+3	9E-7	3E-9	–	–
			LLI wall (2E+3)	–	–	–	2E-5	2E-4
93	Neptunium-240[b/]	W, all compounds	2E+4	8E+4	3E-5	1E-7	3E-4	3E-3
94	Plutonium-234	W, all compounds except PuO_2	8E+3	2E+2	9E-8	3E-10	1E-4	1E-3
		Y, PuO_2	–	2E+2	8E-8	3E-10	–	–
94	Plutonium-235[b/]	W, see ^{234}Pu	9E+5	3E+6	1E-3	4E-6	1E-2	1E-1
		Y, see ^{234}Pu	–	3E+6	1E-3	3E-6	–	–
94	Plutonium-236	W, see ^{234}Pu	2E+0	2E-2	8E-12	–	–	–
			Bone surf (4E+0)	Bone surf (4E-2)	–	5E-14	6E-8	6E-7
		Y, see ^{234}Pu	–	4E-2	2E-11	6E-14	–	–
94	Plutonium-237	W, see ^{234}Pu	1E+4	3E+3	1E-6	5E-9	2E-4	2E-3
		Y, see ^{234}Pu	–	3E+3	1E-6	4E-9	–	–
94	Plutonium-238	W, see ^{234}Pu	9E-1	7E-3	3E-12	–	–	–
			Bone surf (2E+0)	Bone surf (1E-2)	–	2E-14	2E-8	2E-7
		Y, see ^{234}Pu	–	2E-2	8E-12	2E-14	–	–
94	Plutonium-239	W, see ^{234}Pu	8E-1	6E-3	3E-12	–	–	–
			Bone surf (1E+0)	Bone surf (1E-2)	–	2E-14	2E-8	2E-7
		Y, see ^{234}Pu	–	2E-2	7E-12	–	–	–
			–	Bone surf (2E-2)	–	2E-14	–	–

Footnotes appear at the end of these three tables.

Annual Limits on Intake (ALI) and Derived Air Concentrations (DAC) of Radionuclides for Occupational Exposure
Effluent Concentrations
Concentrations for Release to Sanitary Sewerage *(Continued)*

			Table I Occupational Values			Table II Effluent Concentrations		Table III Releases to Sewers
			Col. 1	Col. 2	Col. 3	Col. 1	Col. 2	
			Oral Ingestion	Inhalation				
Atomic No.	Radionuclide	Class	ALI (μCi)	ALI (μCi)	DAC (μCi/ml)	Air (μCi/ml)	Water (μCi/ml)	Monthly Average Concentration (μCi/ml)
94	Plutonium-240	W, see ^{234}Pu	8E-1	6E-3	3E-12	–	–	–
			Bone surf (1E+0)	Bone surf (1E-2)	–	2E-14	2E-8	2E-7
		Y, see ^{234}Pu	–	2E-2	7E-12	–	–	–
			–	Bone surf (2E-2)	–	2E-14	–	–
94	Plutonium-241	W, see ^{234}Pu	4E+1	3E-1	1E-10	–	–	–
			Bone surf (7E+1)	Bone surf (6E-1)	–	8E-13	1E-6	1E-5
		Y, see ^{234}Pu	–	8E-1	3E-10	–	–	–
			–	Bone surf (1E+0)	–	1E-12	–	–
94	Plutonium-242	W, see ^{234}Pu	8E-1	7E-3	3E-12	–	–	–
			Bone surf (1E+0)	Bone surf (1E-2)	–	2E-14	2E-8	2E-7
		Y, see ^{234}Pu	–	2E-2	7E-12	–	–	–
			–	Bone surf (2E-2)	–	2E-14	–	–
94	Plutonium-243	W, see ^{234}Pu	2E+4	4E+4	2E-5	5E-8	2E-4	2E-3
		Y, see ^{234}Pu	–	4E+4	2E-5	5E-8	–	–
94	Plutonium-244	W, see ^{234}Pu	8E-1	7E-3	3E-12	–	–	–
			Bone surf (2E+0)	Bone surf (1E-2)	–	2E-14	2E-8	2E-7
		Y, see ^{234}Pu	–	2E-2	7E-12	–	–	–
			–	Bone surf (2E-2)	–	2E-14	–	–
94	Plutonium-245	W, see ^{234}Pu	2E+3	5E+3	2E-6	6E-9	3E-5	3E-4
		Y, see ^{234}Pu	–	4E+3	2E-6	6E-9	–	–
94	Plutonium-246	W, see ^{234}Pu	4E+2	3E+2	1E-7	4E-10	–	–
			LLI wall (4E+2)	–	–	–	6E-6	6E-5
		Y, see ^{234}Pu	–	3E+2	1E-7	4E-10	–	–
95	Americium-237[b/]	W, all compounds	8E+4	3E+5	1E-4	4E-7	1E-3	1E-2
95	Americium-238[b/]	W, all compounds	4E+4	3E+3	1E-6	–	5E-4	5E-3
			–	Bone surf (6E+3)	–	9E-9	–	–
95	Americium-239	W, all compounds	5E+3	1E+4	5E-6	2E-8	7E-5	7E-4
95	Americium-240	W, all compounds	2E+3	3E+3	1E-6	4E-9	3E-5	3E-4

Footnotes appear at the end of these three tables.

Annual Limits on Intake (ALI) and Derived Air Concentrations (DAC) of Radionuclides for Occupational Exposure
Effluent Concentrations
Concentrations for Release to Sanitary Sewerage *(Continued)*

			Table I Occupational Values			Table II Effluent Concentrations		Table III Releases to Sewers
			Col. 1	Col. 2	Col. 3	Col. 1	Col. 2	
			Oral Ingestion	Inhalation				
Atomic No.	Radionuclide	Class	ALI (μCi)	ALI (μCi)	DAC (μCi/ml)	Air (μCi/ml)	Water (μCi/ml)	Monthly Average Concentration (μCi/ml)
95	Americium-241	W, all compounds	8E-1	6E-3	3E-12	–	–	–
			Bone surf (1E+0)	Bone surf (1E-2)	–	2E-14	2E-8	2E-7
95	Americium-242m	W, all compounds	8E-1	6E-3	3E-12	–	–	–
			Bone surf (1E+0)	Bone surf (1E-2)	–	2E-14	2E-8	2E-7
95	Americium-242	W, all compounds	4E+3	8E+1	4E-8	–	5E-5	5E-4
			–	Bone surf (9E+1)	–	1E-10	–	–
95	Americium-243	W, all compounds	8E-1	6E-3	3E-12	–	–	–
			Bone surf (1E+0)	Bone surf (1E-2)	–	2E-14	2E-8	2E-7
95	Americium-244m[b/]	W, all compounds	6E+4	4E+3	2E-6	–	–	–
			St wall (8E+4)	Bone surf (7E+3)	–	1E-8	1E-3	1E-2
95	Americium-244	W, all compounds	3E+3	2E+2	8E-8	–	4E-5	4E-4
			–	Bone surf (3E+2)	–	4E-10	–	–
95	Americium-245	W, all compounds	3E+4	8E+4	3E-5	1E-7	4E-4	4E-3
95	Americium-246m[b/]	W, all compounds	5E+4	2E+5	8E-5	3E-7	–	–
			St wall (6E+4)	–	–	–	8E-4	8E-3
95	Americium-246[b/]	W, all compounds	3E+4	1E+5	4E-5	1E-7	4E-4	4E-3
96	Curium-238	W, all compounds	2E+4	1E+3	5E-7	2E-9	2E-4	2E-3
96	Curium-240	W, all compounds	6E+1	6E-1	2E-10	–	–	–
			Bone surf (8E+1)	Bone surf (6E-1)	–	9E-13	1E-6	1E-5
96	Curium-241	W, all compounds	1E+3	3E+1	1E-8	–	2E-5	2E-4
			–	Bone surf (4E+1)	–	5E-11	–	–
96	Curium-242	W, all compounds	3E+1	3E-1	1E-10	–	–	–
			Bone surf (5E+1)	Bone surf (3E-1)	–	4E-13	7E-7	7E-6
96	Curium-243	W, all compounds	1E+0	9E-3	4E-12	–	–	–
			Bone surf (2E+0)	Bone surf (2E-2)	–	2E-14	3E-8	3E-7

Footnotes appear at the end of these three tables.

Annual Limits on Intake (ALI) and Derived Air Concentrations (DAC) of Radionuclides for Occupational Exposure
Effluent Concentrations
Concentrations for Release to Sanitary Sewerage *(Continued)*

			Table I Occupational Values			Table II Effluent Concentrations		Table III Releases to Sewers
			Col. 1	Col. 2	Col. 3	Col. 1	Col. 2	
			Oral Ingestion	Inhalation				
Atomic No.	Radionuclide	Class	ALI (μCi)	ALI (μCi)	DAC (μCi/ml)	Air (μCi/ml)	Water (μCi/ml)	Monthly Average Concentration (μCi/ml)
96	Curium-244	W, all compounds	1E+0	1E-2	5E-12	–	–	–
			Bone surf (3E+0)	Bone surf (2E-2)	–	3E-14	3E-8	3E-7
96	Curium-245	W, all compounds	7E-1	6E-3	3E-12	–	–	–
			Bone surf (1E+0)	Bone surf (1E-2)	–	2E-14	2E-8	2E-7
96	Curium-246	W, all compounds	7E-1	6E-3	3E-12	–	–	–
			Bone surf (1E+0)	Bone surf (1E-2)	–	2E-14	2E-8	2E-7
96	Curium-247	W, all compounds	8E-1	6E-3	3E-12	–	–	–
			Bone surf (1E+0)	Bone surf (1E-2)	–	2E-14	2E-8	2E-7
96	Curium-248	W, all compounds	2E-1	2E-3	7E-13	–	–	–
			Bone surf (4E-1)	Bone surf (3E-3)	–	4E-15	5E-9	5E-8
96	Curium-249[b/]	W, all compounds	5E+4	2E+4	7E-6	–	7E-4	7E-3
			–	Bone surf (3E+4)	–	4E-8	–	–
96	Curium-250	W, all compounds	4E-2	3E-4	1E-13	–	–	–
			Bone surf (6E-2)	Bone surf (5E-4)	–	8E-16	9E-10	9E-9
97	Berkelium-245	W, all compounds	2E+3	1E+3	5E-7	2E-9	3E-5	3E-4
97	Berkelium-246	W, all compounds	3E+3	3E+3	1E-6	4E-9	4E-5	4E-4
97	Berkelium-247	W, all compounds	5E-1	4E-3	2E-12	–	–	–
			Bone surf (1E+0)	Bone surf (9E-3)	–	1E-14	2E-8	2E-7
97	Berkelium-249	W, all compounds	2E+2	2E+0	7E-10	–	–	–
			Bone surf (5E+2)	Bone surf (4E+0)	–	5E-12	6E-6	6E-5
97	Berkelium-250	W, all compounds	9E+3	3E+2	1E-7	–	1E-4	1E-3
			–	Bone surf (7E+2)	–	1E-9	–	–
98	Californium-244[b/]	W, all compounds except those given for Y	3E+4	6E+2	2E-7	8E-10	–	–
			St wall (3E+4)	–	–	–	4E-4	4E-3
		Y, oxides and hydroxides	–	6E+2	2E-7	8E-10	–	–

Footnotes appear at the end of these three tables.

Annual Limits on Intake (ALI) and Derived Air Concentrations (DAC) of Radionuclides for Occupational Exposure
Effluent Concentrations
Concentrations for Release to Sanitary Sewerage *(Continued)*

			Table I Occupational Values			Table II Effluent Concentrations		Table III Releases to Sewers
			Col. 1	Col. 2	Col. 3	Col. 1	Col. 2	
			Oral Ingestion	Inhalation				
Atomic No.	Radionuclide	Class	ALI (μCi)	ALI (μCi)	DAC (μCi/ml)	Air (μCi/ml)	Water (μCi/ml)	Monthly Average Concentration (μCi/ml)
98	Californium-246	W, see ^{244}Cf	4E+2	9E+0	4E-9	1E-11	5E-6	5E-5
		Y, see ^{244}Cf	–	9E+0	4E-9	1E-11	–	–
98	Californium-248	W, see ^{244}Cf	8E+0	6E-2	3E-11	–	–	–
			Bone surf (2E+1)	Bone surf (1E-1)	–	2E-13	2E-7	2E-6
		Y, see ^{244}Cf	–	1E-1	4E-11	1E-13	–	–
98	Californium-249	W, see ^{244}Cf	5E-1	4E-3	2E-12	–	–	–
			Bone surf (1E+0)	Bone surf (9E-3)	–	1E-14	2E-8	2E-7
		Y, see ^{244}Cf	–	1E-2	4E-12	–	–	–
			–	Bone surf (1E-2)	–	2E-14	–	–
98	Californium-250	W, see ^{244}Cf	1E+0	9E-3	4E-12	–	–	–
			Bone surf (2E+0)	Bone surf (2E-2)	–	3E-14	3E-8	3E-7
		Y, see ^{244}Cf	–	3E-2	1E-11	4E-14	–	–
98	Californium-251	W, see ^{244}Cf	5E-1	4E-3	2E-12	–	–	–
			Bone surf (1E+0)	Bone surf (9E-3)	–	1E-14	2E-8	2E-7
		Y, see ^{244}Cf	–	1E-2	4E-12	–	–	–
			–	Bone surf (1E-2)	–	2E-14	–	–
98	Californium-252	W, see ^{244}Cf	2E+0	2E-2	8E-12	–	–	–
			Bone surf (5E+0)	Bone surf (4E-2)	–	5E-14	7E-8	7E-7
		Y, see ^{244}Cf	–	3E-2	1E-11	5E-14	–	–
98	Californium-253	W, see ^{244}Cf	2E+2	2E+0	8E-10	3E-12	–	–
			Bone surf (4E+2)	–	–	–	5E-6	5E-5
		Y, see ^{244}Cf	–	2E+0	7E-10	2E-12	–	–
98	Californium-254	W, see ^{244}Cf	2E+0	2E-2	9E-12	3E-14	3E-8	3E-7
		Y, see ^{244}Cf	–	2E-2	7E-12	2E-14	–	–
99	Einsteinium-250	W, all compounds	4E+4	5E+2	2E-7	–	6E-4	6E-3
			–	Bone surf (1E+3)	–	2E-9	–	–
99	Einsteinium-251	W, all compounds	7E+3	9E+2	4E-7	–	1E-4	1E-3
			–	Bone surf (1E+3)	–	2E-9	–	–
99	Einsteinium-253	W, all compounds	2E+2	1E+0	6E-10	2E-12	2E-6	2E-5

Footnotes appear at the end of these three tables.

Annual Limits on Intake (ALI) and Derived Air Concentrations (DAC) of Radionuclides for Occupational Exposure
Effluent Concentrations
Concentrations for Release to Sanitary Sewerage *(Continued)*

			Table I Occupational Values			Table II Effluent Concentrations		Table III Releases to Sewers
			Col. 1	Col. 2	Col. 3	Col. 1	Col. 2	
			Oral Ingestion	Inhalation				
Atomic No.	Radionuclide	Class	ALI (μCi)	ALI (μCi)	DAC (μCi/ml)	Air (μCi/ml)	Water (μCi/ml)	Monthly Average Concentration (μCi/ml)
99	Einsteinium-254m	W, all compounds	3E+2	1E+1	4E-9	1E-11	–	–
			LLI wall (3E+2)	–	–	–	4E-6	4E-5
99	Einsteinium-254	W, all compounds	8E+0	7E-2	3E-11	–	–	–
			Bone surf (2E+1)	Bone surf (1E-1)	–	2E-13	2E-7	2E-6
100	Fermium-252	W, all compounds	5E+2	1E+1	5E-9	2E-11	6E-6	6E-5
100	Fermium-253	W, all compounds	1E+3	1E+1	4E-9	1E-11	1E-5	1E-4
100	Fermium-254	W, all compounds	3E+3	9E+1	4E-8	1E-10	4E-5	4E-4
100	Fermium-255	W, all compounds	5E+2	2E+1	9E-9	3E-11	7E-6	7E-5
100	Fermium-257	W, all compounds	2E+1	2E-1	7E-11	–	–	–
			Bone surf (4E+1)	Bone surf (2E-1)	–	3E-13	5E-7	5E-6
101	Mendelevium-257	W, all compounds	7E+3	8E+1	4E-8	–	1E-4	1E-3
			–	Bone surf (9E+1)	–	1E-10	–	–
101	Mendelevium-258	W, all compounds	3E+1	2E-1	1E-10	–	–	–
			Bone surf (5E+1)	Bone surf (3E-1)	–	5E-13	6E-7	6E-6
- Any single radionuclide not listed above with decay mode other than alpha emission or spontaneous fission and with radioactive half-life less than 2 hours		Submersion[a/]	–	2E+2	1E-7	1E-9	–	–
- Any single radionuclide not listed above with decay mode other than alpha emission or spontaneous fission and with radioactive half-life greater than 2 hours		. . . .	–	2E-1	1E-10	1E-12	1E-8	1E-7
- Any single radionuclide not listed above that decays by alpha emission or spontaneous fission, or any mixture for which either the identity or the concentration of any radionuclide in the mixture is not known		. . . .	–	4E-4	2E-13	1E-15	2E-9	2E-8

Footnotes appear at the end of these three tables.

Footnotes:

[a] *"Submersion" means that values given are for submersion in a hemispherical semi-infinite cloud of airborne material.*

[b] *These radionuclides have radiological half-lives of less than 2 hours. The total effective dose equivalent received during operations with these radionuclides might include a significant contribution from external exposure. The DAC values for all radionuclides, other than those designated Class "Submersion," are based upon the committed effective dose equivalent due to the intake of the radionuclide into the body and do NOT include potentially significant contributions to dose equivalent from external exposures. The licensee may substitute 1E-7 µCi/ml for the listed DAC to account for the submersion dose prospectively, but should use individual monitoring devices or other radiation measuring instruments that measure external exposure to demonstrate compliance with the limits. (See D.203.)*

[c] *For soluble mixtures of U-238, U-234, and U-235 in air, chemical toxicity may be the limiting factor (see D.201e.). If the percent by weight (enrichment) of U-235 is not greater than 5, the concentration value for a 40-hour workweek is 0.2 milligrams uranium per cubic meter of air average. For any enrichment, the product of the average concentration and time of exposure during a 40-hour workweek shall not exceed 8E-3 (SA) µCi-hr/ml, where SA is the specific activity of the uranium inhaled. The specific activity for natural uranium is 6.77E-7 curies per gram U. The specific activity for other mixtures of U-238, U-235, and U-234, if not known, shall be:*

$$SA = 3.6E\text{-}7 \text{ curies/gram U} \quad \text{U-depleted}$$

$$SA = [0.4 + 0.38\,(\text{enrichment}) + 0.0034\,(\text{enrichment})^2]\ E\text{-}6, \quad \text{enrichment} \geq 0.72$$

where enrichment is the percentage by weight of U-235, expressed as percent.

Note:

1. If the identity of each radionuclide in a mixture is known but the concentration of one or more of the radionuclides in the mixture is not known, the DAC for the mixture shall be the most restrictive DAC of any radionuclide in the mixture.

2. If the identity of each radionuclide in the mixture is not known, but it is known that certain radionuclides specified in this appendix are not present in the mixture, the inhalation ALI, DAC, and effluent and sewage concentrations for the mixture are the lowest values specified in this appendix for any radionuclide that is not known to be absent from the mixture; or

Annual Limits on Intake (ALI) and Derived Air Concentrations (DAC) of Radionuclides for Occupational Exposure
Effluent Concentrations
Concentrations for Release to Sanitary Sewerage *(Continued)*

			Table I Occupational Values			Table II Effluent Concentrations		Table III Releases to Sewers
			Col. 1	Col. 2	Col. 3	Col. 1	Col. 2	
			Oral Ingestion	Inhalation				
Atomic No.	Radionuclide	Class	ALI (µCi)	ALI (µCi)	DAC (µCi/ml)	Air (µCi/ml)	Water (µCi/ml)	Monthly Average Concentration (µCi/ml)
If it is known that Ac-227-D and Cm-250-W are not present			–	7E-4	3E-13	–	–	–
If, in addition, it is known that Ac-227-W,Y, Th-229-W,Y, Th-230-W, Th-232-W,Y, Pa-231-W,Y, Np-237-W, Pu-239-W, Pu-240-W, Pu-242-W, Am-241-W, Am-242m-W, Am-243-W, Cm-245-W, Cm-246-W, Cm-247-W, Cm-248-W, Bk-247-W, Cf-249-W, and Cf-251-W are not present			–	7E-3	3E-12	–	–	–
If, in addition, it is known that Sm-146-W, Sm-147-W, Gd-148-D,W, Gd-152-D,W, Th-228-W,Y, Th-230-Y, U-232-Y, U-233-Y, U-234-Y, U-235-Y, U-236-Y, U-238-Y, Np-236-W, Pu-236-W,Y, Pu-238-W,Y, Pu-239-Y, Pu-240-Y, Pu-242-Y, Pu-244-W,Y, Cm-243-W, Cm-244-W, Cf-248-W, Cf-249-Y, Cf-250-W,Y, Cf-251-Y, Cf-252-W,Y, and Cf-254-W,Y are not presen			–	7E-2	3E-11	–	–	–

Annual Limits on Intake (ALI) and Derived Air Concentrations (DAC) of Radionuclides for Occupational Exposure
Effluent Concentrations
Concentrations for Release to Sanitary Sewerage *(Continued)*

Atomic No.	Radionuclide	Class	Table I Occupational Values Col. 1 Oral Ingestion ALI (μCi)	Col. 2 Inhalation ALI (μCi)	Col. 3 Inhalation DAC (μCi/ml)	Table II Effluent Concentrations Col. 1 Air (μCi/ml)	Col. 2 Water (μCi/ml)	Table III Releases to Sewers Monthly Average Concentration (μCi/ml)
If, in addition, it is known that Pb-210-D, Bi-210m-W, Po-210-D,W, Ra-223-W, Ra-225-W, Ra-226-W, Ac-225-D,W,Y, Th-227-W,Y, U-230-D,W,Y, U-232-D,W, Pu-241-W, Cm-240-W, Cm-242-W, Cf-248-Y, Es-254-W, Fm-257-W, and Md-258-W are not present			–	7E-1	3E-10	–	–	–
If, in addition, it is known that Si-32-Y, Ti-44-Y, Fe-60-D, Sr-90-Y, Zr-93-D, Cd-113m-D, Cd-113-D, In-115-D,W, La-138-D, Lu-176-W, Hf-178m-D,W, Hf-182-D,W, Bi-210m-D, Ra-224-W, Ra-228-W, Ac-226-D,W,Y, Pa-230-W,Y, U-233-D,W, U-234-D,W, U-235-D,W, U-236-D,W, U-238-D,W, Pu-241-Y, Bk-249-W, Cf-253-W,Y, and Es-253-W are not present			–	7E+0	3E-9	–	–	–
If it is known that Ac-227-D,W,Y, Th-229-W,Y, Th-232-W,Y, Pa-231-W,Y, Cm-248-W, and Cm-250-W are not present			–	–	–	1E-14	–	–
If, in addition, it is known that Sm-146-W, Gd-148-D,W, Gd-152-D, Th-228-W,Y, Th-230-W,Y, U-232-Y, U-233-Y, U-234-Y, U-235-Y, U-236-Y, U-238-Y, U-Nat-Y, Np-236-W, Np-237-W, Pu-236-W,Y, Pu-238-W,Y, Pu-239-W,Y, Pu-240-W,Y, Pu-242-W,Y, Pu-244-W,Y, Am-241-W, Am-242m-W, Am-243-W, Cm-243-W, Cm-244-W, Cm-245-W, Cm-246-W, Cm-247-W, Bk-247-W, Cf-249-W,Y, Cf-250-W,Y, Cf-251-W,Y, Cf-252-W,Y, and Cf-254-W,Y are not present			–	–	–	1E-13	–	–
If, in addition, it is known that Sm-147-W, Gd-152-W, Pb-210-D, Bi-210m-W, Po-210-D,W, Ra-223-W, Ra-225-W, Ra-226-W, Ac-225-D,W,Y, Th-227-W,Y, U-230-D,W,Y, U-232-D,W, U-Nat-W, Pu-241-W, Cm-240-W, Cm-242-W, Cf-248-W,Y, Es-254-W, Fm-257-W, and Md-258-W are not present			–	–	–	1E-12	–	–
If, in addition it is known that Fe-60, Sr-90, Cd-113m, Cd-113, In-115, I-129, Cs-134, Sm-145, Sm-147, Gd-148, Gd-152, Hg-194 (organic), Bi-210m, Ra-223, Ra-224, Ra-225, Ac-225, Th-228, Th-230, U-233, U-234, U-235, U-236, U-238, U-Nat, Cm-242, Cf-248, Es-254, Fm-257, and Md-258 are not present			–	–	–	–	1E-6	1E-5

3. If a mixture of radionuclides consists of uranium and its daughters in ore dust (10 μm AMAD particle distribution assumed) prior to chemical separation of the uranium from the ore, the following values may be used for the DAC of the mixture: 6E-11 μCi of gross alpha activity from uranium-238, uranium-234, thorium-230, and radium-226 per milliliter of air; 3E-11 μCi of natural uranium per milliliter of air; or 45 micrograms of natural uranium per cubic meter of air.

4. If the identity and concentration of each radionuclide in a mixture are known, the limiting values should be derived as follows: determine, for each radionuclide in the mixture, the ratio between the concentration present in the mixture and the concentration otherwise established in Appendix B for the specific radionuclide when not in a mixture. The sum of such ratios for all of the radionuclides in the mixture may not exceed "1" (i.e., "unity").

   Example: If radionuclides "A," "B," and "C" are present in concentrations C_A, C_B, and C_C, and if the applicable DACs are DAC_A, DAC_B, and DAC_C, respectively, then the concentrations shall be limited so that the following relationship exists:

$$\frac{C_A}{DAC_A} + \frac{C_B}{DAC} SUBB + \frac{C_C}{DAC_C} \ ? \ 1$$

PART D

APPENDIX C

QUANTITIES[a/] OF LICENSED OR REGISTERED MATERIAL REQUIRING LABELING

(In Atomic Number Order)

Radionuclide	Quantity (μCi)[b/]	Radionuclide	Quantity (μCi)[b/]
Hydrogen-3	1,000	Scandium-47	100
Beryllium-7	1,000	Scandium-48	100
Beryllium-10	1	Scandium-49	1,000
Carbon-11	1,000	Titanium-44	1
Carbon-14	100	Titanium-45	1,000
Fluorine-18	1,000	Vanadium-47	1,000
Sodium-22	10	Vanadium-48	100
Sodium-24	100	Vanadium-49	1,000
Magnesium-28	100	Chromium-48	1,000
Aluminum-26	10	Chromium-49	1,000
Silicon-31	1,000	Chromium-51	1,000
Silicon-32	1	Manganese-51	1,000
Phosphorus-32	10	Manganese-52m	1,000
Phosphorus-33	100	Manganese-52	100
Sulfur-35	100	Manganese-53	1,000
Chlorine-36	10	Manganese-54	100
Chlorine-38	1,000	Manganese-56	1,000
Chlorine-39	1,000	Iron-52	100
Argon-39	1,000	Iron-55	100
Argon-41	1,000	Iron-59	10
Potassium-40	100	Iron-60	1
Potassium-42	1,000	Cobalt-55	100
Potassium-43	1,000	Cobalt-56	10
Potassium-44	1,000	Cobalt-57	100
Potassium-45	1,000	Cobalt-58m	1,000
Calcium-41	100	Cobalt-58	100
Calcium-45	100	Cobalt-60m	1,000
Calcium-47	100	Cobalt-60	1
Scandium-43	1,000	Cobalt-61	1,000
Scandium-44m	100	Cobalt-62m	1,000
Scandium-44	100	Nickel-56	100
Scandium-46	10	Nickel-57	100
Nickel-59	100	Copper-60	1,000
Nickel-63	100	Copper-61	1,000
Nickel-65	1,000	Copper-64	1,000
Nickel-66	10	Copper-67	1,000

QUANTITIES[a/] OF LICENSED OR REGISTERED MATERIAL REQUIRING LABELING

(In Atomic Number Order)

(Continued)

Radionuclide	Quantity (μCi)[b/]	Radionuclide	Quantity (μCi)[b/]
Zinc-62	100	Selenium-70	1,000
Zinc-63	1,000	Selenium-73m	1,000
Zinc-65	10	Selenium-73	100
Zinc-69m	100	Selenium-75	100
Zinc-69	1,000	Selenium-79	100
Zinc-71m	1,000	Selenium-81m	1,000
Zinc-72	100	Selenium-81	1,000
Gallium-65	1,000	Selenium-83	1,000
Gallium-66	100	Bromine-74m	1,000
Gallium-67	1,000	Bromine-74	1,000
Gallium-68	1,000	Bromine-75	1,000
Gallium-70	1,000	Bromine-76	100
Gallium-72	100	Bromine-77	1,000
Gallium-73	1,000	Bromine-80m	1,000
Germanium-66	1,000	Bromine-80	1,000
Germanium-67	1,000	Bromine-82	100
Germanium-68	10	Bromine-83	1,000
Germanium-69	1,000	Bromine-84	1,000
Germanium-71	1,000	Krypton-74	1,000
Germanium-75	1,000	Krypton-76	1,000
Germanium-77	1,000	Krypton-77	1,000
Germanium-78	1,000	Krypton-79	1,000
Arsenic-69	1,000	Krypton-81	1,000
Arsenic-70	1,000	Krypton-83m	1,000
Arsenic-71	100	Krypton-85m	1,000
Arsenic-72	100	Krypton-85	1,000
Arsenic-73	100	Krypton-87	1,000
Arsenic-74	100	Krypton-88	1,000
Arsenic-76	100	Rubidium-79	1,000
Arsenic-77	100	Rubidium-81m	1,000
Arsenic-78	1,000	Rubidium-81	1,000
Rubidium-82m	1,000	Strontium-81	1,000
Rubidium-83	100	Strontium-83	100
Rubidium-84	100	Strontium-85m	1,000
Rubidium-86	100	Strontium-85	100
Rubidium-87	100	Strontium-87m	1,000
Rubidium-88	1,000	Strontium-89	10
Rubidium-89	1,000	Strontium-90	0.1
Strontium-80	100	Strontium-91	100

QUANTITIES[a/] OF LICENSED OR REGISTERED MATERIAL REQUIRING LABELING

(In Atomic Number Order)

(Continued)

Radionuclide	Quantity (μCi)[b/]	Radionuclide	Quantity (μCi)[b/]
Strontium-92	100	Niobium-96	100
Yttrium-86m	1,000	Niobium-97	1,000
Yttrium-86	100	Niobium-98	1,000
Yttrium-87	100	Molybdenum-90	100
Yttrium-88	10	Molybdenum-93m	100
Yttrium-90m	1,000	Molybdenum-93	10
Yttrium-90	10	Molybdenum-99	100
Yttrium-91m	1,000	Molybdenum-101	1,000
Yttrium-91	10	Technetium-93m	1,000
Yttrium-92	100	Technetium-93	1,000
Yttrium-93	100	Technetium-94m	1,000
Yttrium-94	1,000	Technetium-94	1,000
Yttrium-95	1,000	Technetium-96m	1,000
Zirconium-86	100	Technetium-96	100
Zirconium-88	10	Technetium-97m	100
Zirconium-89	100	Technetium-97	1,000
Zirconium-93	1	Technetium-98	10
Zirconium-95	10	Technetium-99m	1,000
Zirconium-97	100	Technetium-99	100
Niobium-88	1,000	Technetium-101	1,000
Niobium-89m (66 min)	1,000	Technetium-104	1,000
Niobium-89 (122 min)	1,000	Ruthenium-94	1,000
Niobium-90	100	Ruthenium-97	1,000
Niobium-93m	10	Ruthenium-103	100
Niobium-94	1	Ruthenium-105	1,000
Niobium-95m	100	Ruthenium-106	1
Niobium-95	100	Rhodium-99m	1,000
Rhodium-99	100	Palladium-103	100
Rhodium-100	100	Palladium-107	10
Rhodium-101m	1,000	Palladium-109	100
Rhodium-101	10	Silver-102	1,000
Rhodium-102m	10	Silver-103	1,000
Rhodium-102	10	Silver-104m	1,000
Rhodium-103m	1,000	Silver-104	1,000
Rhodium-105	100	Silver-105	100
Rhodium-106m	1,000	Silver-106m	100
Rhodium-107	1,000	Silver-106	1,000
Palladium-100	100	Silver-108m	1
Palladium-101	1,000	Silver-11Om	10

QUANTITIES[a/] OF LICENSED OR REGISTERED MATERIAL REQUIRING LABELING

(In Atomic Number Order)

(Continued)

Radionuclide	Quantity (μCi)[b/]	Radionuclide	Quantity (μCi)[b/]
Silver-111	100	Antimony-116m	1,000
Silver-112	100	Antimony-116	1,000
Silver-115	1,000	Antimony-117	1,000
Cadmium-104	1,000	Antimony-118m	1,000
Cadmium-107	1,000	Antimony-119	1,000
Cadmium-109	1	Antimony-120 (16 min)	1,000
Cadmium-113m	0.1	Antimony-120 (5.76 d)	100
Cadmium-113	100	Antimony-122	100
Cadmium-115m	10	Antimony-124m	1,000
Cadmium-115	100	Antimony-124	10
Cadmium-117m	1,000	Antimony-125	100
Cadmium-117	1,000	Antimony-126m	1,000
Indium-109	1,000	Antimony-126	100
Indium-110 (69.1 min)	1,000	Antimony-127	100
Indium-11O (4.9 h)	1,000	Antimony-128 (10.4 min)	1,000
Indium-111	100	Antimony-128 (9.O1 h)	100
Indium-112	1,000	Antimony-129	100
Indium-113m	1,000	Antimony-130	1,000
Indium-114m	10	Antimony-131	1,000
Indium-115m	1,000	Tellurium-116	1,000
Indium-115	100	Tellurium-121m	10
Indium-116m	1,000	Tellurium-121	100
Indium-117m	1,000	Tellurium-123m	10
Indium-117	1,000	Tellurium-123	100
Indium-119m	1,000	Tellurium-125m	10
Tin-110	100	Tellurium-127m	10
Tin-111	1,000	Tellurium-127	1,000
Tin-113	100	Tellurium-129m	10
Tin-117m	100	Tellurium-129	1,000
Tin-119m	100	Tellurium-131m	10
Tin-121m	100	Tellurium-131	100
Tin-121	1,000	Tellurium-132	10
Tin-123m	1,000	Tellurium-133m	100
Tin-123	10	Tellurium-133	1,000
Tin-125	10	Tellurium-134	1,000
Tin-126	10	Iodine-120m	1,000
Tin-127	1,000	Iodine-120	100
Tin-128	1,000	Iodine-121	1,000
Antimony-115	1,000	Iodine-123	100

QUANTITIES[a/] OF LICENSED OR REGISTERED MATERIAL REQUIRING LABELING

(In Atomic Number Order)

(Continued)

Radionuclide	Quantity (μCi)[b/]	Radionuclide	Quantity (μCi)[b/]
Iodine-124	10	Xenon-131m	1,000
Iodine-125	1	Xenon-133m	1,000
Iodine-126	1	Xenon-133	1,000
Iodine-128	1,000	Xenon-135m	1,000
Iodine-129	1	Xenon-135	1,000
Iodine-130	10	Xenon-138	1,000
Iodine-131	1	Cesium-125	1,000
Iodine-132m	100	Cesium-127	1,000
Iodine-132	100	Cesium-129	1,000
Iodine-133	10	Cesium-130	1,000
Iodine-134	1,000	Cesium-131	1,000
Iodine-135	100	Cesium-132	100
Xenon-120	1,000	Cesium-134m	1,000
Xenon-121	1,000	Cesium-134	10
Xenon-122	1,000	Cesium-135m	1,000
Xenon-123	1,000	Cesium-135	100
Xenon-125	1,000	Cesium-136	10
Xenon-127	1,000	Cesium-137	10
Xenon-129m	1,000	Cesium-138	1,000
Barium-126	1,000	Cerium-134	100
Barium-128	100	Cerium-135	100
Barium-131m	1,000	Cerium-137m	100
Barium-131	100	Cerium-137	1,000
Barium-133m	100	Cerium-139	100
Barium-133	100	Cerium-141	100
Barium-135m	100	Cerium-143	100
Barium-139	1,000	Cerium-144	1
Barium-140	100	Praseodymium-136	1,000
Barium-141	1,000	Praseodymium-137	1,000
Barium-142	1,000	Praseodymium-138m	1,000
Lanthanum-131	1,000	Praseodymium-139	1,000
Lanthanum-132	100	Praseodymium-142m	1,000
Lanthanum-135	1,000	Praseodymium-142	100
Lanthanum-137	10	Praseodymium-143	100
Lanthanum-138	100	Praseodymium-144	1,000
Lanthanum-140	100	Praseodymium-145	100
Lanthanum-141	100	Praseodymium-147	1,000
Lanthanum-142	1,000	Neodymium-136	1,000
Lanthanum-143	1,000	Neodymium-138	100

QUANTITIES[a/] OF LICENSED OR REGISTERED MATERIAL REQUIRING LABELING

(In Atomic Number Order)

(Continued)

Radionuclide	Quantity (μCi)[b/]	Radionuclide	Quantity (μCi)[b/]
Neodymium-139m	1,000	Promethium-150	1,000
Neodymium-139	1,000	Promethium-151	100
Neodymium-141	1,000	Samarium-141m	1,000
Neodymium-147	100	Samarium-141	1,000
Neodymium-149	1,000	Samarium-142	1,000
Neodymium-151	1,000	Samarium-145	100
Promethium-141	1,000	Samarium-146	1
Promethium-143	100	Samarium-147	100
Promethium-144	10	Samarium-151	10
Promethium-145	10	Samarium-153	100
Promethium-146	1	Samarium-155	1,000
Promethium-147	10	Samarium-156	1,000
Promethium-148m	10	Europium-145	100
Promethium-148	10	Europium-146	100
Promethium-149	100	Europium-147	100
Europium-148	10	Terbium-153	1,000
Europium-149	100	Terbium-154	100
Europium-150 (12.62 h)	100	Terbium-155	1,000
Europium-150 (34.2 y)	1	Terbium-156m (5.O h)	1,000
Europium-152m	100	Terbium-156m (24.4 h)	1,000
Europium-152	1	Terbium-156	100
Europium-154	1	Terbium-157	10
Europium-155	10	Terbium-158	1
Europium-156	100	Terbium-160	10
Europium-157	100	Terbium-161	100
Europium-158	1,000	Dysprosium-155	1,000
Gadolinium-145	1,000	Dysprosium-157	1,000
Gadolinium-146	10	Dysprosium-159	100
Gadolinium-147	100	Dysprosium-165	1,000
Gadolinium-148	0.001	Dysprosium-166	100
Gadolinium-149	100	Holmium-155	1,000
Gadolinium-151	10	Holmium-157	1,000
Gadolinium-152	100	Holmium-159	1,000
Gadolinium-153	10	Holmium-161	1,000
Gadolinium-159	100	Holmium-162m	1,000
Terbium-147	1,000	Holmium-162	1,000
Terbium-149	100	Holmium-164m	1,000
Terbium-150	1,000	Holmium-164	1,000
Terbium-151	100	Holmium-166m	1

QUANTITIES[a/] OF LICENSED OR REGISTERED MATERIAL REQUIRING LABELING

(In Atomic Number Order)

(Continued)

Radionuclide	Quantity (μCi)[b/]	Radionuclide	Quantity (μCi)[b/]
Holmium-166	100	Thulium-171	10
Holmium-167	1,000	Thulium-172	100
Erbium-161	1,000	Thulium-173	100
Erbium-165	1,000	Thulium-175	1,000
Erbium-169	100	Ytterbium-162	1,000
Erbium-171	100	Ytterbium-166	100
Erbium-172	100	Ytterbium-167	1,000
Thulium-162	1,000	Ytterbium-169	100
Thulium-166	100	Ytterbium-175	100
Thulium-167	100	Ytterbium-177	1,000
Thulium-170	10	Ytterbium-178	1,000
Lutetium-169	100	Tantalum-173	1,000
Lutetium-170	100	Tantalum-174	1,000
Lutetium-171	100	Tantalum-175	1,000
Lutetium-172	100	Tantalum-176	100
Lutetium-173	10	Tantalum-177	1,000
Lutetium-174m	10	Tantalum-178	1,000
Lutetium-174	10	Tantalum-179	100
Lutetium-176m	1,000	Tantalum-180m	1,000
Lutetium-176	100	Tantalum-180	100
Lutetium-177m	10	Tantalum-182m	1,000
Lutetium-177	100	Tantalum-182	10
Lutetium-178m	1,000	Tantalum-183	100
Lutetium-178	1,000	Tantalum-184	100
Lutetium-179	1,000	Tantalum-185	1,000
Hafnium-170	100	Tantalum-186	1,000
Hafnium-172	1	Tungsten-176	1,000
Hafnium-173	1,000	Tungsten-177	1,000
Hafnium-175	100	Tungsten-178	1,000
Hafnium-177m	1,000	Tungsten-179	1,000
Hafnium-178m	0.1	Tungsten-181	1,000
Hafnium-179m	10	Tungsten-185	100
Hafnium-180m	1,000	Tungsten-187	100
Hafnium-181	10	Tungsten-188	10
Hafnium-182m	1,000	Rhenium-177	1,000
Hafnium-182	0.1	Rhenium-178	1,000
Hafnium-183	1,000	Rhenium-181	1,000
Hafnium-184	100	Rhenium-182 (12.7 h)	1,000
Tantalum-172	1,000	Rhenium-182 (64.O h)	100

QUANTITIES[a/] OF LICENSED OR REGISTERED MATERIAL REQUIRING LABELING

(In Atomic Number Order)

(Continued)

Radionuclide	Quantity (μCi)[b/]	Radionuclide	Quantity (μCi)[b/]
Rhenium-184m	10	Rhenium-189	100
Rhenium-184	100	Osmium-180	1,000
Rhenium-186m	10	Osmium-181	1,000
Rhenium-186	100	Osmium-182	100
Rhenium-187	1,000	Osmium-185	100
Rhenium-188m	1,000	Osmium-189m	1,000
Rhenium-188	100	Osmium-191m	1,000
Osmium-191	100	Gold-198m	100
Osmium-193	100	Gold-198	100
Osmium-194	1	Gold-199	100
Iridium-182	1,000	Gold-200m	100
Iridium-184	1,000	Gold-200	1,000
Iridium-185	1,000	Gold-201	1,000
Iridium-186	100	Mercury-193m	100
Iridium-187	1,000	Mercury-193	1,000
Iridium-188	100	Mercury-194	1
Iridium-189	100	Mercury-195m	100
Iridium-190m	1,000	Mercury-195	1,000
Iridium-190	100	Mercury-197m	100
Iridium-192m (1.4 min)	10	Mercury-197	1,000
Iridium-192 (73.8 d)	1	Mercury-199m	1,000
Iridium-194m	10	Mercury-203	100
Iridium-194	100	Thallium-194m	1,000
Iridium-195m	1,000	Thallium-194	1,000
Iridium-195	1,000	Thallium-195	1,000
Platinum-186	1,000	Thallium-197	1,000
Platinum-188	100	Thallium-198m	1,000
Platinum-189	1,000	Thallium-198	1,000
Platinum-191	100	Thallium-199	1,000
Platinum-193m	100	Thallium-201	1,000
Platinum-193	1,000	Thallium-200	1,000
Platinum-195m	100	Thallium-202	100
Platinum-197m	1,000	Thallium-204	100
Platinum-197	100	Lead-195m	1,000
Platinum-199	1,000	Lead-198	1,000
Platinum-200	100	Lead-199	1,000
Gold-193	1,000	Lead-200	100
Gold-194	100	Lead-201	1,000
Gold-195	10	Lead-202m	1,000

QUANTITIES[a/] OF LICENSED OR REGISTERED MATERIAL REQUIRING LABELING

(In Atomic Number Order)

(Continued)

Radionuclide	Quantity (μCi)[b/]	Radionuclide	Quantity (μCi)[b/]
Lead-202	10	Lead-209	1,000
Lead-203	1,000	Lead-210	0.01
Lead-205	100	Lead-211	100
Lead-212	1	Thorium-226	10
Lead-214	100	Thorium-227	0.01
Bismuth-200	1,000	Thorium-228	0.001
Bismuth-201	1,000	Thorium-229	0.001
Bismuth-202	1,000	Thorium-230	0.001
Bismuth-203	100	Thorium-231	100
Bismuth-205	100	Thorium-232	100
Bismuth-206	100	Thorium-234	10
Bismuth-207	10	Thorium-natural	100
Bismuth-210m	0.1	Protactinium-227	10
Bismuth-210	1	Protactinium-228	1
Bismuth-212	10	Protactinium-230	0.1
Bismuth-213	10	Protactinium-231	0.001
Bismuth-214	100	Protactinium-232	1
Polonium-203	1,000	Protactinium-233	100
Polonium-205	1,000	Protactinium-234	100
Polonium-207	1,000	Uranium-230	0.01
Polonium-210	0.1	Uranium-231	100
Astatine-207	100	Uranium-232	0.001
Astatine-211	10	Uranium-233	0.001
Radon-220	1	Uranium-234	0.001
Radon-222	1	Uranium-235	0.001
Francium-222	100	Uranium-236	0.001
Francium-223	100	Uranium-237	100
Radium-223	0.1	Uranium-238	100
Radium-224	0.1	Uranium-239	1,000
Radium-225	0.1	Uranium-240	100
Radium-226	0.1	Uranium-natural	100
Radium-227	1,000	Neptunium-232	100
Radium-228	0.1	Neptunium-233	1,000
Actinium-224	1	Neptunium-234	100
Actinium-225	0.01	Neptunium-235	100
Actinium-226	0.1	Neptunium-236 (1.15E+5 y)	0.001
Actinium-227	0.001	Neptunium-236 (22.5 h)	1
Actinium-228	1	Neptunium-237	0.001
Neptunium-238	10	Neptunium-239	100

QUANTITIES[a/] OF LICENSED OR REGISTERED MATERIAL REQUIRING LABELING

(In Atomic Number Order)

(Continued)

Radionuclide	Quantity (μCi)[b/]
Neptunium-240	1,000
Plutonium-234	10
Plutonium-235	1,000
Plutonium-236	0.001
Plutonium-237	100
Plutonium-238	0.001
Plutonium-239	0.001
Plutonium-240	0.001
Plutonium-241	0.01
Plutonium-242	0.001
Plutonium-243	1,000
Plutonium-244	0.001
Plutonium-245	100
Americium-237	1,000
Americium-238	100
Americium-239	1,000
Americium-240	100
Americium-241	0.001
Americium-242m	0.001
Americium-242	10
Americium-243	0.001
Americium-244m	100
Americium-244	10
Americium-245	1,000
Americium-246m	1,000
Americium-246	1,000
Curium-238	100
Curium-240	0.1
Curium-241	1
Curium-242	0.01
Curium-243	0.001
Curium-244	0.001
Curium-245	0.001
Curium-246	0.001
Curium-247	0.001
Curium-248	0.001
Curium-249	1,000
Berkelium-245	100
Berkelium-246	100
Berkelium-247	0.001
Berkelium-249	0.1
Berkelium-250	10
Californium-244	100
Californium-246	1
Californium-248	0.01
Californium-249	0.001
Californium-250	0.001
Californium-251	0.001
Californium-252	0.001
Californium-253	0.1
Californium-254	0.001
Einsteinium-250	100
Einsteinium-251	100
Einsteinium-253	0.1
Einsteinium-254m	1
Einsteinium-254	0.01
Fermium-252	1
Fermium-253	1
Fermium-254	10
Fermium-255	1
Fermium-257	0.01
Mendelevium-257	10
Mendelevium-258	0.01

QUANTITIES[a/] OF LICENSED OR REGISTERED MATERIAL REQUIRING LABELING

(In Atomic Number Order)

(Continued)

Radionuclide	Quantity (μCi)[b/]	Radionuclide	Quantity (μCi)[b/]
Any alpha-emitting radionuclide not listed above or mixtures of alpha emitters of unknown composition	0.001	Any radionuclide other than alpha-emitting radionuclides not listed above, or mixtures of beta emitters of unknown composition	0.01

NOTE: For purposes of D.902e., D.905a., and D.1201a. where there is involved a combination of radionuclides in known amounts, the limit for the combination shall be derived as follows: determine, for each radionuclide in the combination, the ratio between the quantity present in the combination and the limit otherwise established for the specific radionuclide when not in combination. The sum of such ratios for all radionuclides in the combination may not exceed "1" -- that is, unity.

[a/] *The quantities listed above were derived by taking 1/10th of the most restrictive ALI listed in Table I, Columns 1 and 2, of Appendix B to Part D, rounding to the nearest factor of 10, and constraining the values listed between 37 Bq and 37 MBq (0.001 and 1,000 μCi). Values of 3.7 MBq (100 μCi) have been assigned for radionuclides having a radioactive half-life in excess of E+9 years, except rhenium, 37 MBq (1,000 ?Ci), to take into account their low specific activity.*

[b/] *To convert μCi to kBq, multiply the μCi value by 37.*

PART D

Appendix D (reserved)

Appendix E (reserved)

[PART D

APPENDIX F

QUANTITIES FOR USE WITH DECOMMISSIONING[a/]

Material	Microcurie[b/]
Americium-241	0.01
Antimony-122	100
Antimony-124	10
Antimony-125	10
Arsenic-73	100
Arsenic-74	10
Arsenic-76	10
Arsenic-77	100
Barium-131	10
Barium-133	10
Barium-140	10
Bismuth-210	1
Bromine-82	10
Cadmium-109	10
Cadmium-115m	10
Cadmium-115	100
Calcium-45	10
Calcium-47	10
Carbon-14	100
Cerium-141	100
Cerium-143	100
Cerium-144	1
Cesium-131	1,000
Cesium-134m	100
Cesium-134	1
Cesium-135	10
Cesium-136	10
Cesium-137	10
Chlorine-36	10
Chlorine-38	10
Chromium-51	1,000
Cobalt-58m	10
Cobalt-58	10

[a/] *This Appendix is retained for use by those Agreement States that need to adopt decommissioning regulations compatible with the Nuclear Regulatory Commission.*

[b/] *To convert µCi to kBq, multiply the µCi value by 37.*

QUANTITIES FOR USE WITH DECOMMISSIONING[a/] *(Continued)*

Material	Microcurie[b/]
Cobalt-60	1
Copper-64	100
Dysprosium-165	10
Dysprosium-166	100
Erbium-169	100
Erbium-171	100
Europium-152 (9.2 h)	100
Europium-152 (13 yr)	1
Europium-154	1
Europium-155	10
Florine-18	1,000
Gadolinium-153	10
Gadolinium-159	100
Gallium-72	10
Germanium-71	0
Hafnium-181	10
Holmium-166	100
Hydrogen-3	1,000
Indium-113m	100
Indium-114m	10
Indium-115m	100
Indium-115	10
Iodine-125	1
Iodine-126	1
Iodine-129	0.1
Iodine-131	1
Iodine-132	10
Iodine-133	1
Iodine-134	10
Iodine-135	10
Iridium-192	10
Iridium-194	100
Iron-55	100
Iron-59	10
Krypton-85	100
Krypton-87	10
Lanthanum-140	10

[a/] *This Appendix is retained for use by those Agreement States that need to adopt decommissioning regulations compatible with the Nuclear Regulatory Commission.*

[b/] *To convert µCi to kBq, multiply the µCi value by 37.*

QUANTITIES FOR USE WITH DECOMMISSIONING[a/] *(Continued)*

Material	Microcurie[b/]
Lutetium-177	100
Manganese-52	10
Manganese-54	10
Manganese-56	10
Mercury-197m	100
Mercury-197	100
Mercury-203	10
Molybdenum-99	100
Neodymium-147	100
Neodymium-149	100
Nickel-59	100
Nickel-63	10
Nickel-65	100
Niobium-93m	10
Niobium-95	10
Niobium-97	10
Osmium-185	10
Osmium-191m	100
Osmium-191	100
Osmium-193	100
Palladium-103	100
Palladium-109	100
Phosphorus-32	10
Platinum-191	100
Platinum-193m	100
Platinum-193	100
Platinum-197m	100
Platinum-197	100
Plutonium-239	0.01
Polonium-210	0.1
Potassium-42	10
Praseodymium-142	100
Praseodymium-143	100
Promethium-147	10
Promethium-149	10
Radium-226	0.01
Rhenium-186	100

[a/] *This Appendix is retained for use by those Agreement States that need to adopt decommissioning regulations compatible with the Nuclear Regulatory Commission.*

[b/] *To convert µCi to kBq, multiply the µCi value by 37.*

QUANTITIES FOR USE WITH DECOMMISSIONING[a/] *(Continued)*

Material	Microcurie[b/]
Rhenium-188	100
Rhodium-103m	100
Rhodium-105	100
Rubidium-86	10
Rubidium-87	10
Ruthenium-97	100
Ruthenium-103	10
Ruthenium-105	10
Ruthenium-106	1
Samarium-151	10
Samarium-153	100
Scandium-46	10
Scandium-47	100
Scandium-48	10
Selenium-75	10
Silicon-31	100
Silver-105	10
Silver-11Om	1
Silver-111	100
Sodium-22	1
Sodium-24	10
Strontium-85	10
Strontium-89	1
Strontium-90	0.1
Strontium-91	10
Strontium-92	10
Sulfur -35	100
Tantalum-182	10
Technetium-96	10
Technetium-97m	100
Technetium-97	100
Technetium-99m	100
Technetium-99	10
Tellurium-125m	10
Tellurium-127m	10
Tellurium-127	100
Tellurium-129m	10

[a/] *This Appendix is retained for use by those Agreement States that need to adopt decommissioning regulations compatible with the Nuclear Regulatory Commission.*

[b/] *To convert µCi to kBq, multiply the µCi value by 37.*

QUANTITIES FOR USE WITH DECOMMISSIONING[a/] *(Continued)*

Material	Microcurie[b/]
Tellurium-129	100
Tellurium-131m	10
Tellurium-132	10
Terbium-160	10
Thallium-200	100
Thallium-201	100
Thallium-202	100
Thallium-204	10
Thorium (natural)[c/]	100
Thulium-170	10
Thulium-171	10
Tin-113	10
Tin-125	10
Tungsten-181	10
Tungsten-185	10
Tungsten-187	100
Uranium (natural)[d/]	100
Uranium-233	0.01
Uranium-234	0.01
Uranium-235	0.01
Vanadium-48	10
Xenon-131m	1,000
Xenon-133	100
Xenon-135	100
Ytterbium-175	100
Yttrium-90	10
Yttrium-91	10
Yttrium-92	100
Yttrium-93	100
Zinc-65	10
Zinc-69m	100
Zinc-69	1,000
Zirconium-93	10
Zirconium-95	10
Zirconium-97	10

[a/] *This Appendix is retained for use by those Agreement States that need to adopt decommissioning regulations compatible with the Nuclear Regulatory Commission.*

[b/] *To convert µCi to kBq, multiply the µCi value by 37.*

[c/] *Based on alpha disintegration rate of Th-232, Th-230 and their daughter products.*

[d/] *Based on alpha disintegration rate of U-238, U-234, and U-235.*

QUANTITIES FOR USE WITH DECOMMISSIONING[a/] *(Continued)*

Material	Microcurie[b/]
Any alpha emitting radionuclide not listed above or mixtures of alpha emitters of unknown composition	0.01
Any radionuclide other than alpha emitting radionuclides, not listed above or mixtures of beta emitters of unknown composition	0.1

NOTE:Where there is involved a combination of isotopes in known amounts, the limit for the combination should be derived as follows: Determine, for each isotope in the combination, the ratio between the quantity present in the combination and the limit otherwise established for the specific isotope when not in combination. The sum of such ratios for all the isotopes in the combination may not exceed "1" -- that is, unity.]

[a/] *This Appendix is retained for use by those Agreement States that need to adopt decommissioning regulations compatible with the Nuclear Regulatory Commission.*

[b/] *To convert µCi to kBq, multiply the µCi value by 37.*

Appendix G

Requirements for Transfers of Low-Level Radioactive Waste Intended for Disposal at Licensed Land Disposal Facilities and Manifests

I. Manifest

A waste generator, collector, or processor who transports, or offers for transportation, low-level radioactive waste intended for ultimate disposal at a licensed low-level radioactive waste land disposal facility must prepare a Manifest reflecting information requested on applicable Agency Forms XX (Uniform Low-Level Radioactive Waste Manifest (Shipping Paper)) and XY (Uniform Low-Level Radioactive Waste Manifest (Container and Waste Description)) and, if necessary, on an applicable Agency Form XZ (Uniform Low-Level Radioactive Waste Manifest (Manifest Index and Regional Compact Tabulation)). Agency Forms XX and XXA must be completed and must physically accompany the pertinent low-level waste shipment. Upon agreement between shipper and consignee, Agency Forms XY and XYA and XZ and XZA may be completed, transmitted, and stored in electronic media with the capability for producing legible, accurate, and complete records on the respective forms. Licensees are not required by Agency to comply with the manifesting requirements of this part when they ship:

(a) LLW for processing and expect its return (i.e., for storage under their license) prior to disposal at a licensed land disposal facility;

(b) LLW that is being returned to the licensee who is the "waste generator" or "generator," as defined in this part; or

(c) Radioactively contaminated material to a "waste processor" that becomes the processor's "residual waste."

For guidance in completing these forms, refer to the instructions that accompany the forms. Copies of manifests required by this appendix may be legible carbon copies, photocopies, or computer printouts that reproduce the data in the format of the uniform manifest.

Agency Forms XX, XXA, XY, XYA, XZ and XZA, and the accompanying instructions, in hard copy, may be obtained from the [cite appropriate Agency address]

This appendix includes information requirements of the Department of Transportation, as codified in 49 CFR part 172. Information on hazardous, medical, or other waste, required to meet Environmental Protection Agency regulations, as codified in 40 CFR parts 259, 261 or elsewhere, is not addressed in this section, and must be provided on the required EPA forms. However, the required EPA forms must accompany the Uniform Low-Level Radioactive Waste Manifest required by this appendix.

As used in this appendix, the following definitions apply:

Agency Forms XX, XXA, XY, XYA, XZ, and XZA are official Agency Forms referenced in this appendix. Licensees need not use originals of these Agency Forms as long as any substitute forms are equivalent to the original documentation in respect to content, clarity, size, and location of information. Upon agreement between the shipper and consignee, Agency Forms XY (and XYA) and Agency Forms XZ (and XZA) may be completed, transmitted, and stored in electronic media. The electronic media must have the capability for producing legible, accurate, and complete records in the format of the uniform manifest.

Chemical description means a description of the principal chemical characteristics of a low-level radioactive waste.

Computer-readable medium means that the regulatory agency's computer can transfer the information from the medium into its memory.

Consignee means the designated receiver of the shipment of low-level radioactive waste.

Decontamination facility means a facility operating under a Commission or Agreement State license whose principal purpose is decontamination of equipment or materials to accomplish recycle, reuse, or other waste management objectives, and, for purposes of this part, is not considered to be a consignee for LLW shipments.

Disposal container means a container principally used to confine low-level radioactive waste during disposal operations at a land disposal facility (also see "high integrity container"). Note that for some shipments, the disposal container may be the transport package.

EPA identification number means the number received by a transporter following application to the Administrator of EPA as required by 40 CFR part 263.

Generator means a licensee operating under a Commission or Agreement State license who (1) is a waste generator as defined in this part, or (2) is the licensee to whom waste can be attributed within the context of the Low-Level Radioactive Waste Policy Amendments Act of 1985 (e.g., waste generated as a result of decontamination or recycle activities).

High integrity container (HIC) means a container commonly designed to meet the structural stability requirements of section V of this appendix, and to meet Department of Transportation requirements for a Type A package.

Land disposal facility means the land, buildings and structures, and equipment, which are intended to be used for the disposal of radioactive wastes. For purposes of this chapter, a "geologic repository" is not considered a "land disposal facility.
Package means the assembly of components necessary to ensure compliance with the packaging requirements of DOT regulations, together with its radioactive contents, as presented for transport.
Physical description means the items called for on Agency Form XY to describe a low-level radioactive waste.

Residual waste means low-level radioactive waste resulting from processing or decontamination activities that cannot be easily separated into distinct batches attributable to specific waste

generators. This waste is attributable to the processor or decontamination facility, as applicable.

Shipper means the licensed entity (i.e., the waste generator, waste collector, or waste processor) who offers low-level radioactive waste for transportation, typically consigning this type of waste to a licensed waste collector, waste processor, or land disposal facility operator.

Shipping paper means Agency Form XX and, if required, Agency Form XXA, which includes the information, required by DOT in 49 CFR part 172.

Uniform Low-Level Radioactive Waste Manifest or *uniform manifest* means the combination of Agency Forms XX, XY, and, if necessary, XZ, and their respective continuation sheets as needed, or equivalent.

Waste collector means an entity, operating under a Commission or Agreement State license, whose principal purpose is to collect and consolidate waste generated by others, and to transfer this waste, without processing or repackaging the collected waste, to another licensed waste collector, licensed waste processor, or licensed land disposal facility.

Waste description means the physical, chemical and radiological description of a low-level radioactive waste as called for on Agency Form XY.

Waste generator means an entity, operating under a Commission or Agreement State license, who (1) possesses any material or component that contains radioactivity or is radioactively contaminated for which the licensee foresees no further use, and (2) transfers this material or component to a licensed land disposal facility or to a licensed waste collector or processor for handling or treatment prior to disposal. A licensee performing processing or decontamination services may be a "waste generator" if the transfer of low-level radioactive waste from its facility is defined as "residual waste."

Waste processor means an entity, operating under a Commission or Agreement State license, whose principal purpose is to process, repackage, or otherwise treat low-level radioactive material or waste generated by others prior to eventual transfer of waste to a licensed low-level radioactive waste land disposal facility.

Waste type means a waste within a disposal container having a unique physical description (i.e., a specific waste descriptor code or description; or a waste sorbed on or solidified in a specifically defined media).

Information Requirements

A. General Information

The shipper of the radioactive waste, shall provide the following information on the uniform manifest:

1. The name, facility address, and telephone number of the licensee shipping the waste;

2. An explicit declaration indicating whether the shipper is acting as a waste generator, collector,

processor, or a combination of these identifiers for purposes of the manifested shipment; and

3. The name, address, and telephone number, or the name and EPA identification number for the carrier transporting the waste.

B. Shipment Information

The shipper of the radioactive waste shall provide the following information regarding the waste shipment on the uniform manifest:

1. The date of the waste shipment;

2. The total number of packages/disposal containers;

3. The total disposal volume and disposal weight in the shipment;

4. The total radionuclide activity in the shipment;

5. The activity of each of the radionuclides H - 3, C - 14, Tc-99, and I - 129 contained in the shipment; and

6. The total masses of U - 233, U - 235, and plutonium in special nuclear material, and the total mass of uranium and thorium in source material.

C. Disposal Container and Waste Information

The shipper of the radioactive waste shall provide the following information on the uniform manifest regarding the waste and each disposal container of waste in the shipment:

1. An alphabetic or numeric identification that uniquely identifies each disposal container in the shipment;

2. A physical description of the disposal container, including the manufacturer and model of any high integrity container;

3. The volume displaced by the disposal container;

4. The gross weight of the disposal container, including the waste;

5. For waste consigned to a disposal facility, the maximum radiation level at the surface of each disposal container;

6. A physical and chemical description of the waste;

7. The total weight percentage of chelating agent for any waste containing more than 0.1% chelating agent by weight, plus the identity of the principal chelating agent;

8. The approximate volume of waste within a container;

9. The sorbing or solidification media, if any, and the identity of the solidification media vendor and brand name;

10. The identities and activities of individual radionuclides contained in each container, the masses of U - 233, U - 235, and plutonium in special nuclear material, and the masses of uranium and thorium in source material. For discrete waste types (i.e., activated materials, contaminated equipment, mechanical filters, sealed source/devices, and wastes in solidification/stabilization media), the identities and activities of individual radionuclides associated with or contained on these waste types within a disposal container shall be reported;

11. The total radioactivity within each container; and

12. For wastes consigned to a disposal facility, the classification of the waste pursuant to section IV of this appendix. Waste not meeting the structural stability requirements of section V(b) of this appendix must be identified.

D. Uncontainerized Waste Information

The shipper of the radioactive waste shall provide the following information on the uniform manifest regarding a waste shipment delivered without a disposal container:

1. The approximate volume and weight of the waste;

2. A physical and chemical description of the waste;

3. The total weight percentage of chelating agent if the chelating agent exceeds 0.1% by weight, plus the identity of the principal chelating agent;

4. For waste consigned to a disposal facility, the classification of the waste pursuant to section IV. of this appendix. Waste not meeting the structural stability requirements of section V(b) of this appendix must be identified;

5. The identities and activities of individual radionuclides contained in the waste, the masses of U - 233, U - 235, and plutonium in special nuclear material, and the masses of uranium and thorium in source material; and

6. For wastes consigned to a disposal facility, the maximum radiation levels at the surface of the waste.

E. Multi-Generator Disposal Container Information

This section applies to disposal containers enclosing mixtures of waste originating from different generators. (Note: The origin of the LLW resulting from a processor's activities may be attributable to one or more "generators" (including "waste generators") as defined in this part). It also applies to mixtures of wastes shipped in an uncontainerized form, for which portions of the mixture within the shipment originate from different generators.

1. For homogeneous mixtures of waste, such as incinerator ash, provide the waste description applicable to the mixture and the volume of the waste attributed to each generator.

2. For heterogeneous mixtures of waste, such as the combined products from a large compactor, identify each generator contributing waste to the disposal container, and, for discrete waste types (i.e., activated materials, contaminated equipment, mechanical filters, sealed source/devices, and wastes in solidification/stabilization media), the identities and activities of individual radionuclides contained on these waste types within the disposal container. For each generator, provide the following:

(a) The volume of waste within the disposal container;

(b) A physical and chemical description of the waste, including the solidification agent, if any;

(c) The total weight percentage of chelating agents for any disposal container containing more than 0.1% chelating agent by weight, plus the identity of the principal chelating agent;

(d) The sorbing or solidification media, if any, and the identity of the solidification media vendor and brand name if the media is claimed to meet stability requirements in section V(b) of this appendix; and

(e) Radionuclide identities and activities contained in the waste, the masses of U - 233, U - 235, and plutonium in special nuclear material, and the masses of uranium and thorium in source material if contained in the waste.

II. Certification

An authorized representative of the waste generator, processor, or collector shall certify by signing and dating the shipment manifest that the transported materials are properly classified, described, packaged, marked, and labeled and are in proper condition for transportation according to the applicable regulations of the Department of Transportation and the Agency. A collector in signing the certification is certifying that nothing has been done to the collected waste, which would invalidate the waste generator's certification.

III. Control and Tracking

A. Any licensee or registrant who transfers radioactive waste to a land disposal facility or a licensed waste collector shall comply with the requirements in paragraphs A.1 through 9 of this appendix. Any licensee or registrant who transfers waste to a licensed waste processor for waste treatment or repackaging shall comply with the requirements of paragraphs A.4 through 9 of this appendix. A licensee shall:

1. Prepare all wastes so that the waste is classified according to section IV. of this appendix and meets the waste characteristics requirements in section V. of this appendix;

2. Label each disposal container (or transport package if potential radiation hazards preclude labeling

of the individual disposal container) of waste to identify whether it is Class A waste, Class B waste, Class C waste, or greater then Class C waste, in accordance with section IV. of this appendix;

3. Conduct a quality assurance program to assure compliance with sections IV. and V. of this appendix (the program must include management evaluation of audits);

4. Prepare the Agency Uniform Low-Level Radioactive Waste Manifest as required by this appendix;

5. Forward a copy or electronically transfer the Uniform Low-Level Radioactive Waste Manifest to the intended consignee so that either (i) receipt of the manifest precedes the LLW shipment or (ii) the manifest is delivered to the consignee with the waste at the time the waste is transferred to the consignee. Using both (i) and (ii) is also acceptable;

6. Include Agency Form XX (and Agency Form XXA, if required) with the shipment regardless of the option chosen in paragraph A.5 of this section;

7. Receive acknowledgement of the receipt of the shipment in the form of a signed copy of Agency Form XX;

8. Retain a copy of or electronically store the Uniform Low-Level Radioactive Waste Manifest and documentation of acknowledgement of receipt as the record of transfer of licensed material as required by these regulations; and

9. For any shipments or any part of a shipment for which acknowledgement of receipt has not been received within the times set forth in this appendix, conduct an investigation in accordance with paragraph E of this appendix.

B. Any waste collector licensee who handles only prepackaged waste shall:

1. Acknowledge receipt of the waste from the shipper within one week of receipt by returning a signed copy of Agency Form XX;

2. Prepare a new manifest to reflect consolidated shipments that meet the requirements of this appendix. The waste collector shall ensure that, for each container of waste in the shipment, the manifest identifies the generator of that container of waste;

3. Forward a copy or electronically transfer the Uniform Low-Level Radioactive Waste Manifest to the intended consignee so that either: (i) Receipt of the manifest precedes the LLW shipment or (ii) the manifest is delivered to the consignee with the waste at the time the waste is transferred to the consignee. Using both (i) and (ii) is also acceptable;

4. Include Agency Form XX (and Agency Form XXA, if required) with the shipment regardless of the option chosen in paragraph B.3 of this appendix;

5. Receive acknowledgement of the receipt of the shipment in the form of a signed copy of Agency Form XX;

6. Retain a copy of or electronically store the Uniform Low-Level Radioactive Waste Manifest and documentation of acknowledgement of receipt as the record of transfer of licensed material as required by these regulations;

7. For any shipments or any part of a shipment for which acknowledgement of receipt has not been received within the times set forth in this appendix, conduct an investigation in accordance with paragraph E of this appendix; and

8. Notify the shipper and the Agency when any shipment, or part of a shipment, has not arrived within 60 days after receipt of an advance manifest, unless notified by the shipper that the shipment has been cancelled.

C. Any licensed waste processor who treats or repackages waste shall:

1. Acknowledge receipt of the waste from the shipper within one week of receipt by returning a signed copy of Agency Form XX;

2. Prepare a new manifest that meets the requirements of this appendix. Preparation of the new manifest reflects that the processor is responsible for meeting these requirements. For each container of waste in the shipment, the manifest shall identify the waste generators, the preprocessed waste volume, and the other information as required in paragraph I.E. of this appendix;

3. Prepare all wastes so that the waste is classified according to section IV. of this appendix and meets the waste characteristics requirements in section V. of this appendix;

4. Label each package of waste to identify whether it is Class A waste, Class B waste, or Class C waste, in accordance with sections IV. and VI. of this appendix;

5. Conduct a quality assurance program to assure compliance with sections IV. and V. of this appendix (the program shall include management evaluation of audits);

6. Forward a copy or electronically transfer the Uniform Low-Level Radioactive Waste Manifest to the intended consignee so that either: (i) Receipt of the manifest precedes the LLW shipment or (ii) the manifest is delivered to the consignee with the waste at the time the waste is transferred to the consignee. Using both (i) and (ii) is also acceptable;

7. Include Agency Form XX (and Agency Form XXA, if required) with the shipment regardless of the option chosen in paragraph C.6 of this section;

8. Receive acknowledgement of the receipt of the shipment in the form of a signed copy of Agency Form XX;

9. Retain a copy of or electronically store the Uniform Low-Level Radioactive Waste Manifest and documentation of acknowledgement of receipt as the record of transfer of licensed material as required by these regulations;

10. For any shipment or any part of a shipment for which acknowledgement of receipt has not been

received within the times set forth in this appendix, conduct an investigation in accordance with paragraph E of this appendix; and

11. Notify the shipper and the Agency when any shipment, or part of a shipment, has not arrived within 60 days after receipt of an advance manifest, unless notified by the shipper that the shipment has been cancelled.

D. The land disposal facility operator shall:

1. Acknowledge receipt of the waste within one week of receipt by returning, as a minimum, a signed copy of Agency Form XX to the shipper. The shipper to be notified is the licensee who last possessed the waste and transferred the waste to the operator. If any discrepancy exists between materials listed on the Uniform Low-Level Radioactive Waste Manifest and materials received, copies or electronic transfer of the affected forms must be returned indicating the discrepancy;

2. Maintain copies of all completed manifests and electronically store the information required by this Appendix until the Agency terminates the license; and

3. Notify the shipper and the Agency when any shipment, or part of a shipment, has not arrived within 60 days after receipt of an advance manifest, unless notified by the shipper that the shipment has been cancelled.

E. Any shipment or part of a shipment for which acknowledgement is not received within the times set forth in this section must:

1. Be investigated by the shipper if the shipper has not received notification or receipt within 20 days after transfer; and

2. Be traced and reported. The investigation shall include tracing the shipment and filing a report with the Agency. Each licensee who conducts a trace investigation shall file a written report with the Agency within 2 weeks of completion of the investigation.

IV. Classification of Waste

(a) Classification of waste for near surface disposal. (1) *Considerations*. Determination of the classification of radioactive waste involves two considerations. First, consideration must be given to the concentration of long-lived radionuclides (and their shorter-lived precursors) whose potential hazard will persist long after such precautions as institutional controls, improved waste form, and deeper disposal have ceased to be effective. These precautions delay the time when long-lived radionuclides could cause exposures. In addition, the magnitude of the potential dose is limited by the concentration and availability of the radionuclide at the time of exposure. Second, consideration must be given to the concentration of shorter-lived radionuclides for which requirements on institutional controls, waste form, and disposal methods are effective.

(2) *Classes of waste*. (i) Class A waste is waste that is usually segregated from other waste classes at the disposal site. The physical form and characteristics of Class A waste must meet the minimum requirements set forth in V.(a) of this appendix. If Class A waste also meets the stability requirements set forth in V.(b) of this appendix, it is not necessary to segregate the waste for

disposal.

(ii) Class B waste is waste that must meet more rigorous requirements on waste form to ensure stability after disposal. The physical form and characteristics of Class B waste must meet both the minimum and stability requirements set forth in section V of this appendix.

(iii) Class C waste is waste that not only must meet more rigorous requirements on waste form to ensure stability but also requires additional measures at the disposal facility to protect against inadvertent intrusion. The physical form and characteristics of Class C waste must meet both the minimum and stability requirements set forth in section V of this appendix.

(iv) Waste that is not generally acceptable for near-surface disposal is waste for which form and disposal methods must be different, and in general more stringent, than those specified for Class C waste. In the absence of specific requirements in this part, such waste must be disposed of in a geologic repository as defined in 10 CFR part 60 unless proposals for disposal of such waste in a disposal site licensed pursuant to 10 CFR Part 61 are approved by the Nuclear Regulatory Commission.

(3) Classification determined by long-lived radionuclides. If radioactive waste contains only radionuclides listed in Table 1, classification shall be determined as follows:

(i) If the concentration does not exceed 0.1 times the value in Table 1, the waste is Class A.

(ii) If the concentration exceeds 0.1 times the value in Table 1 but does not exceed the value in Table 1, the waste is Class C.

(iii) If the concentration exceeds the value in Table 1, the waste is not generally acceptable for near-surface disposal.

(iv) For wastes containing mixtures of radionuclides listed in Table 1, the total concentration shall be determined by the sum of fractions

Table 1	
Radionuclide	**Concentration curies per cubic meter**
C-14	8
C-14 in activated metal	80
Ni-59 in activated metal	220
Nb-94 in activated metal	0.2
Tc-99	3
I-129	0.08
Alpha emitting transuranic nuclides with half-life greater than 5 years	[1]100
Pu-241	[1]3,500
Cm-242	[1]20,000

[1]Units are nanocuries per gram.

(4) Classification determined by short-lived radionuclides. If radioactive waste does not contain any of the radionuclides listed in Table 1, classification shall be determined based on the concentrations shown in Table 2. However, as specified in paragraph (a)(6) of this section, if radioactive waste does not contain any nuclides listed in either Table 1 or 2, it is Class A.

(i) If the concentration does not exceed the value in Column 1, the waste is Class A.

(ii) If the concentration exceeds the value in Column 1, but does not exceed the value in Column 2, the waste is Class B.

(iii) If the concentration exceeds the value in Column 2, but does not exceed the value in Column 3, the waste is Class C.

(iv) If the concentration exceeds the value in Column 3, the waste is not generally acceptable for near-surface disposal.

(v) For wastes containing mixtures of the nuclides listed in Table 2, the total concentration shall be determined by the sum of fractions rule

Table 2			
Radionuclide	**Concentration, curies per cubic meter**		
	Col. 1	**Col. 2**	**Col. 3**
Total of all nuclides with less than 5 year half-life	700	([1])	([1])
H-3	40	([1])	([1])
Co-60	700	([1])	([1])
Ni-63	3.5	70	700
Ni-63 in activated metal	35	700	7000
Sr-90	0.04	150	7000
Cs-137	1	44	4600

[1] There are no limits established for these radionuclides in Class B or C wastes. Practical considerations such as the effects of external radiation and internal heat generation on transportation, handling, and disposal will limit the concentrations for these wastes. These wastes shall be Class B unless the concentrations of other nuclides in Table 2 determine the waste to the Class C independent of these nuclides.

(5) Classification determined by both long- and short-lived radionuclides. If radioactive waste contains a mixture of radionuclides, some of which are listed in Table 1, and some of which are listed in Table 2, classification shall be determined as follows:

(i) If the concentration of a nuclide listed in Table 1 does not exceed 0.1 times the value listed in Table 1, the class shall be that determined by the concentration of nuclides listed in Table 2.

(ii) If the concentration of a nuclide listed in Table 1 exceeds 0.1 times the value listed in Table 1 but does not exceed the value in Table 1, the waste shall be Class C, provided the concentration of nuclides listed in Table 2 does not exceed the value shown in Column 3 of Table 2.

(6) Classification of wastes with radionuclides other than those listed in Tables 1 and 2. If radioactive waste does not contain any nuclides listed in either Table 1 or 2, it is Class A.

(7) The sum of the fractions rule for mixtures of radionuclides. For determining classification for waste that contains a mixture of radionuclides, it is necessary to determine the sum of fractions by dividing each nuclide's concentration by the appropriate limit and adding the resulting values. The appropriate limits must all be taken from the same column of the same table. The sum of the fractions for the column must be less than 1.0 if the waste class is to be determined by that column. Example: A waste contains Sr-90 in a concentration of 50 Ci/m^3. and Cs-137 in a concentration of 22 Ci/m^3. Since the concentrations both exceed the values in Column 1, Table 2, they must be compared to Column 2 values. For Sr-90 fraction 50/150=0.33; for Cs-137 fraction, 22/44=0.5; the sum of the fractions=0.83. Since the sum is less than 1.0, the waste is Class B.

(8) *Determination of concentrations in wastes*. The concentration of a radionuclide may be determined by indirect methods such as use of scaling factors which relate the inferred concentration of one radionuclide to another that is measured, or radionuclide material accountability, if there is reasonable assurance that the indirect methods can be correlated with actual measurements. The concentration of a radionuclide may be averaged over the volume of the waste, or weight of the waste if the units are expressed as nanocuries per gram.

V. Waste characteristics.

(a) The following requirements are minimum requirements for all classes of waste and are intended to facilitate handling at the disposal site and provide protection of health and safety of personnel at the disposal site.

(1) Waste must not be packaged for disposal in cardboard or fiberboard boxes.

(2) Liquid waste must be solidified or packaged in sufficient absorbent material to absorb twice the volume of the liquid.

(3) Solid waste containing liquid shall contain as little free standing and noncorrosive liquid as is reasonably achievable, but in no case shall the liquid exceed 1% of the volume.

(4) Waste must not be readily capable of detonation or of explosive decomposition or reaction at normal pressures and temperatures, or of explosive reaction with water.

(5) Waste must not contain, or be capable of generating, quantities of toxic gases, vapors, or fumes harmful to persons transporting, handling, or disposing of the waste. This does not apply to radioactive gaseous waste packaged in accordance with paragraph (a)(7) of this section.

(6) Waste must not be pyrophoric. Pyrophoric materials contained in waste shall be treated, prepared, and packaged to be nonflammable.

(7) Waste in a gaseous form must be packaged at a pressure that does not exceed 1.5 atmospheres at 20ºC. Total activity must not exceed 100 curies per container.

(8) Waste containing hazardous, biological, pathogenic, or infectious material must be treated to reduce to the maximum extent practicable the potential hazard from the non-radiological materials.

(b) The requirements in this section are intended to provide stability of the waste. Stability is intended to ensure that the waste does not structurally degrade and affect overall stability of the site through slumping, collapse, or other failure of the disposal unit and thereby lead to water infiltration. Stability is also a factor in limiting exposure to an inadvertent intruder, since it provides a recognizable and nondispersible waste.

(1) Waste must have structural stability. A structurally stable waste form will generally maintain its physical dimensions and its form, under the expected disposal conditions such as weight of overburden and compaction equipment, the presence of moisture, and microbial activity, and internal factors such as radiation effects and chemical changes. Structural stability can be provided by the waste form itself, processing the waste to a stable form, or placing the waste in a disposal container or structure that provides stability after disposal.

(2) Notwithstanding the provisions in V(a)(2) and (3), liquid wastes, or wastes containing liquid, must be converted into a form that contains as little free standing and noncorrosive liquid as is reasonably achievable, but in no case shall the liquid exceed 1% of the volume of the waste when the waste is in a disposal container designed to ensure stability, or 0.5% of the volume of the waste for waste processed to a stable form.

(3) Void spaces within the waste and between the waste and its package must be reduced to the extent practicable.

VI. Labeling.

Each package of waste must be clearly labeled to identify whether it is Class A waste, Class B waste, or Class C waste, in accordance with section IV of this appendix.

PART D

Attachment to **APPENDIX G**

CLASSIFICATION AND CHARACTERISTICS OF LOW-LEVEL RADIOACTIVE WASTE

Section I. - Classification of Radioactive Waste for Land Disposal.

(a) Considerations. Determination of the classification of radioactive waste involves two considerations. First, consideration must be given to the concentration of long-lived radionuclides (and their shorter-lived precursors) whose potential hazard will persist long after such precautions as institutional controls, improved waste form, and deeper disposal have ceased to be effective. These precautions delay the time when long-lived radionuclides could cause exposures. In addition, the magnitude of the potential dose is limited by the concentration and availability of the radionuclide at the time of exposure. Second, consideration must be given to the concentration of shorter-lived radionuclides for which requirements on institutional controls, waste form, and disposal methods are effective.

(b) Classes of waste.

(1) Class A waste is waste that is usually segregated from other waste classes at the disposal site. The physical form and characteristics of Class A waste must meet the minimum requirements set forth in Section II.(a). If Class A waste also meets the stability requirements set forth in Section II.(b), it is not necessary to segregate the waste for disposal.

(2) Class B waste is waste that must meet more rigorous requirements on waste form to ensure stability after disposal. The physical form and characteristics of Class B waste must meet both the minimum and stability requirements set forth in Section II.

(3) Class C waste is waste that not only must meet more rigorous requirements on waste form to ensure stability but also requires additional measures at the disposal facility to protect against inadvertent intrusion. The physical form and characteristics of Class C waste must meet both the minimum and stability requirements set forth in Section II.

(c) Classification determined by long-lived radionuclides. If the radioactive waste contains only radionuclides listed in Table IV, classification shall be determined as follows:

(1) If the concentration does not exceed 0.1 times the value in Table IV, the waste is Class A.

(2) If the concentration exceeds 0.1 times the value in Table IV, but does not exceed the value in Table IV, the waste is Class C.

(3) If the concentration exceeds the value in Table IV, the waste is not generally acceptable for land disposal.

(4) For wastes containing mixtures of radionuclides listed in Table IV, the total concentration shall be determined by the sum of fractions rule described in Section I.(g).

TABLE IV

Radionuclide	Concentration Curie/Cubic Meter[a/]	Concentration Nanocurie/Gram[b/]
C-14	8	
C-14 in activated metal	80	
Ni-59 in activated metal	220	
Nb-94 in activated metal	0.2	
Tc-99	3	
I-129	0.08	
Alpha emitting transuranic radionuclides with half-life greater than five years		100
Pu-241		3,500
Cm-242		20,000
Ra-226		100

[a/] *To convert the Ci/m^3 values to gigabecquerel (GBq) per cubic meter, multiply the Ci/m^3 value by 37.*

[b/] *To convert the nCi/g values to becquerel (Bq) per gram, multiply the nCi/g value by 37.*

(d) Classification determined by short-lived radionuclides. If the waste does not contain any of the radionuclides listed in Table IV, classification shall be determined based on the concentrations shown in Table V. However, as specified in Section I.(f), if radioactive waste does not contain any nuclides listed in either Table IV or V, it is Class A.

(1) If the concentration does not exceed the value in Column 1, the waste is Class A.

(2) If the concentration exceeds the value in Column 1 but does not exceed the value in Column 2, the waste is Class B.

(3) If the concentration exceeds the value in Column 2 but does not exceed the value in Column 3, the waste is Class C.

(4) If the concentration exceeds the value in Column 3, the waste is not generally acceptable for near-surface disposal.

(5) For wastes containing mixtures of the radionuclides listed in Table V, the total concentration shall be determined by the sum of fractions rule described in Section I.(g).

TABLE V

Radionuclide	Concentration Column 1	Curie/Cubic Meter[a/] Column 2	Column 3
Total of all radio-nuclides with less than 5-year half-life	700	*	*
H-3	40	*	*
Co-60	700	*	*
Ni-63	3.5	70	700
Ni-63 in activated metal	35	700	7000
Sr-90	0.04	150	7000
Cs-137	1	44	4600

[a/] *AGENCY NOTE: To convert the Ci/m^3 value to gigabecquerel (GBq) per cubic meter, multiply the Ci/m^3 value by 37. There are no limits established for these radionuclides in Class B or C wastes. Practical considerations such as the effects of external radiation and internal heat generation on transportation, handling, and disposal will limit the concentrations for these wastes. These wastes shall be Class B unless the concentrations of other radionuclides in Table V determine the waste to be Class C independent of these radionuclides.*

(e) Classification determined by both long- and short-lived radionuclides. If the radioactive waste contains a mixture of radionuclides, some of which are listed in Table IV and some of which are listed in Table V, classification shall be determined as follows:

(1) If the concentration of a radionuclide listed in Table IV is less than 0.1 times the value listed in Table IV, the class shall be that determined by the concentration of radionuclides listed in Table V.

(2) If the concentration of a radionuclide listed in Table IV exceeds 0.1 times the value listed in Table IV, but does not exceed the value in Table IV, the waste shall be Class C, provided the concentration of radionuclides listed in Table V does not exceed the value shown in Column 3 of Table V.

(f) Classification of wastes with radionuclides other than those listed in Tables IV and V. If the waste does not contain any radionuclides listed in either Table IV or V, it is Class A.

(g) The sum of the fractions rule for mixtures of radionuclides. For determining classification for waste that contains a mixture of radionuclides, it is necessary to determine the sum of fractions by dividing each radionuclide's concentration by the appropriate limit and adding the resulting values. The appropriate limits must all be taken from the same column of the

same table. The sum of the fractions for the column must be less than 1.0 if the waste class is to be determined by that column. Example: A waste contains Sr-90 in a concentration of 1.85 TBq/m^3 (50 Ci/m^3) and Cs-137 in a concentration of 814 GBq/m^3 (22 Ci/m^3). Since the concentrations both exceed the values in Column 1, Table V, they must be compared to Column 2 values. For Sr-90 fraction, 50/150 = 0.33., for Cs-137 fraction, 22/44 = 0.5; the sum of the fractions = 0.83. Since the sum is less than 1.0, the waste is Class B.

(h) Determination of concentrations in wastes. The concentration of a radionuclide may be determined by indirect methods such as use of scaling factors which relate the inferred concentration of one radionuclide to another that is measured, or radionuclide material accountability, if there is reasonable assurance that the indirect methods can be correlated with actual measurements. The concentration of a radionuclide may be averaged over the volume of the waste, or weight of the waste if the units are expressed as becquerel (nanocurie) per gram.

Section II. - Radioactive Waste Characteristics.

(a) The following are minimum requirements for all classes of waste and are intended to facilitate handling and provide protection of health and safety of personnel at the disposal site.

(1) Wastes shall be packaged in conformance with the conditions of the license issued to the site operator to which the waste will be shipped. Where the conditions of the site license are more restrictive than the provisions of Part D, the site license conditions shall govern.

(2) Wastes shall not be packaged for disposal in cardboard or fiberboard boxes.

(3) Liquid waste shall be packaged in sufficient absorbent material to absorb twice the volume of the liquid.

(4) Solid waste containing liquid shall contain as little free-standing and non-corrosive liquid as is reasonably achievable, but in no case shall the liquid exceed 1 percent of the volume.

(5) Waste shall not be readily capable of detonation or of explosive decomposition or reaction at normal pressures and temperatures, or of explosive reaction with water.

(6) Waste shall not contain, or be capable of generating, quantities of toxic gases, vapors, or fumes harmful to persons transporting, handling, or disposing of the waste. This does not apply to radioactive gaseous waste packaged in accordance with Section II.(a)(8).

(7) Waste must not be pyrophoric. Pyrophoric materials contained in wastes shall be treated, prepared, and packaged to be nonflammable.****/

****/ *See. A.4 of these regulations for definition of pyrophoric material.*

(8) Wastes in a gaseous form shall be packaged at an absolute pressure that does not exceed 1.5 atmospheres at 20°C. Total activity shall not exceed 3.7 TBq (100 Ci) per container.

(9) Wastes containing hazardous, biological, pathogenic, or infectious material shall be treated to reduce to the maximum extent practicable the potential hazard from the non-radiological materials.

(b) The following requirements are intended to provide stability of the waste. Stability is intended to ensure that the waste does not degrade and affect overall stability of the site through slumping, collapse, or other failure of the disposal unit and thereby lead to water infiltration. Stability is also a factor in limiting exposure to an inadvertent intruder, since it provides a recognizable and nondispersible waste.

(1) Waste shall have structural stability. A structurally stable waste form will generally maintain its physical dimensions and its form, under the expected disposal conditions such as weight of overburden and compaction equipment, the presence of moisture, and microbial activity, and internal factors such as radiation effects and chemical changes. Structural stability can be provided by the waste form itself, processing the waste to a stable form, or placing the waste in a disposal container or structure that provides stability after disposal.

(2) Notwithstanding the provisions in Section II.(a)(3) and (4), liquid wastes, or wastes containing liquid, shall be converted into a form that contains as little free-standing and non-corrosive liquid as is reasonably achievable, but in no case shall the liquid exceed 1 percent of the volume of the waste when the waste is in a disposal container designed to ensure stability, or 0.5 percent of the volume of the waste for waste processed to a stable form.

(3) Void spaces within the waste and between the waste and its package shall be reduced to the extent practicable.

Section III. - Labeling.

Each package of waste shall be clearly labeled to identify whether it is Class A, Class B, or Class C waste, in accordance with Section I.